KOMPAS-3D v18

more than 100 novelties

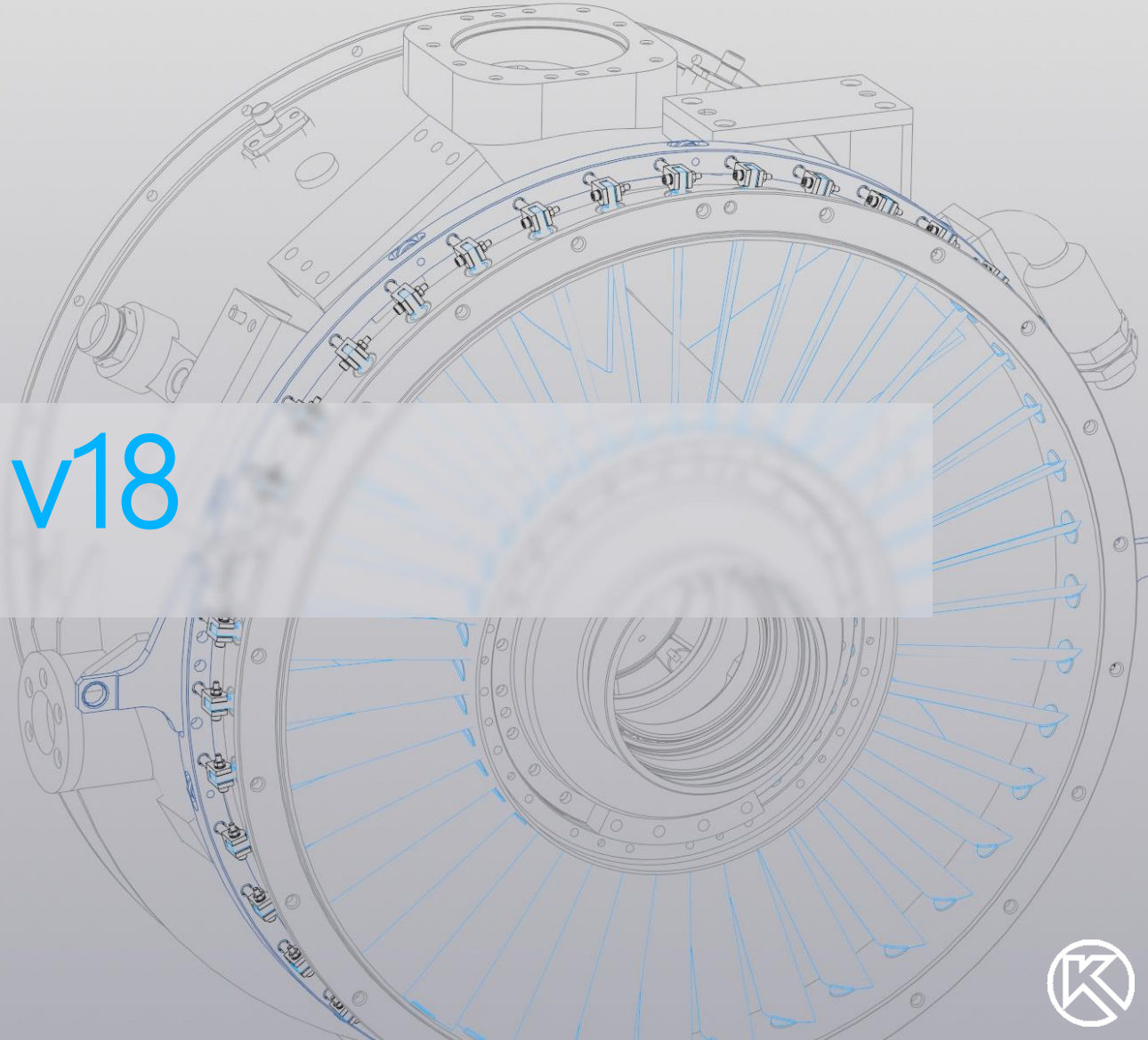

C3D [Inside]

Key novelties

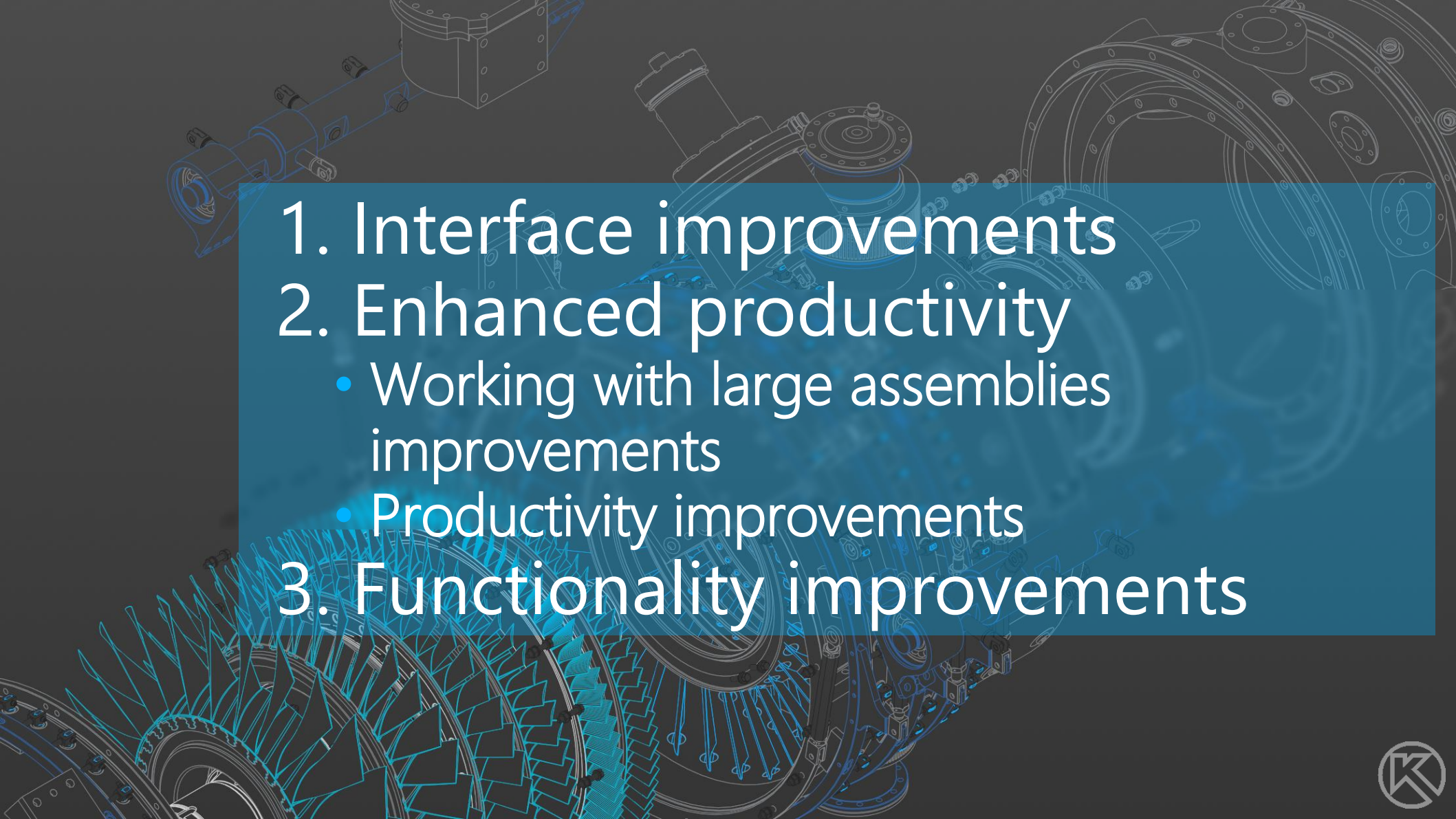

1. Interface improvements
2. Enhanced productivity
   - Working with large assemblies improvements
   - Productivity improvements
3. Functionality improvements

Interface improvements

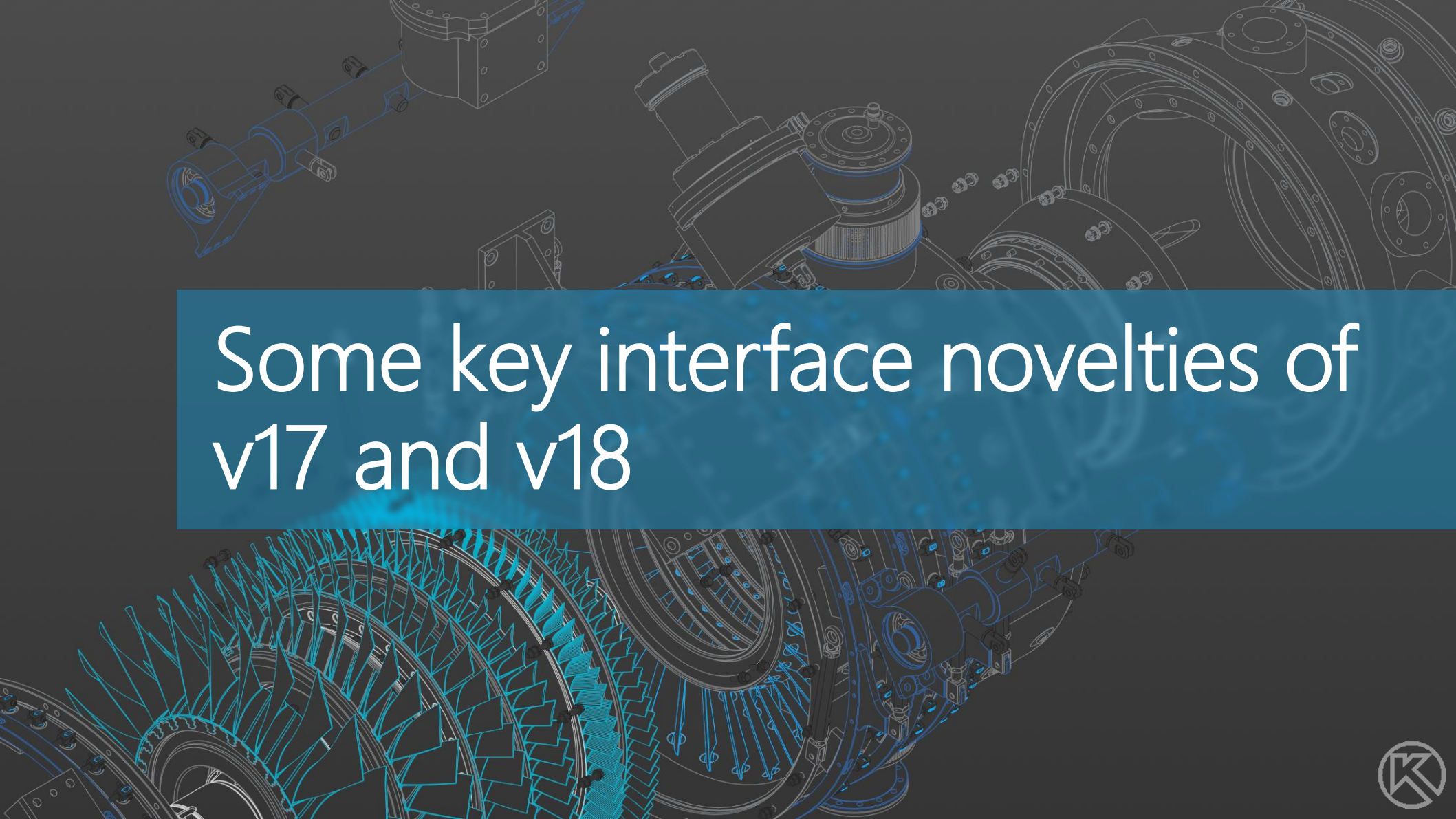

Some key interface novelties of v17 and v18

Smart start page

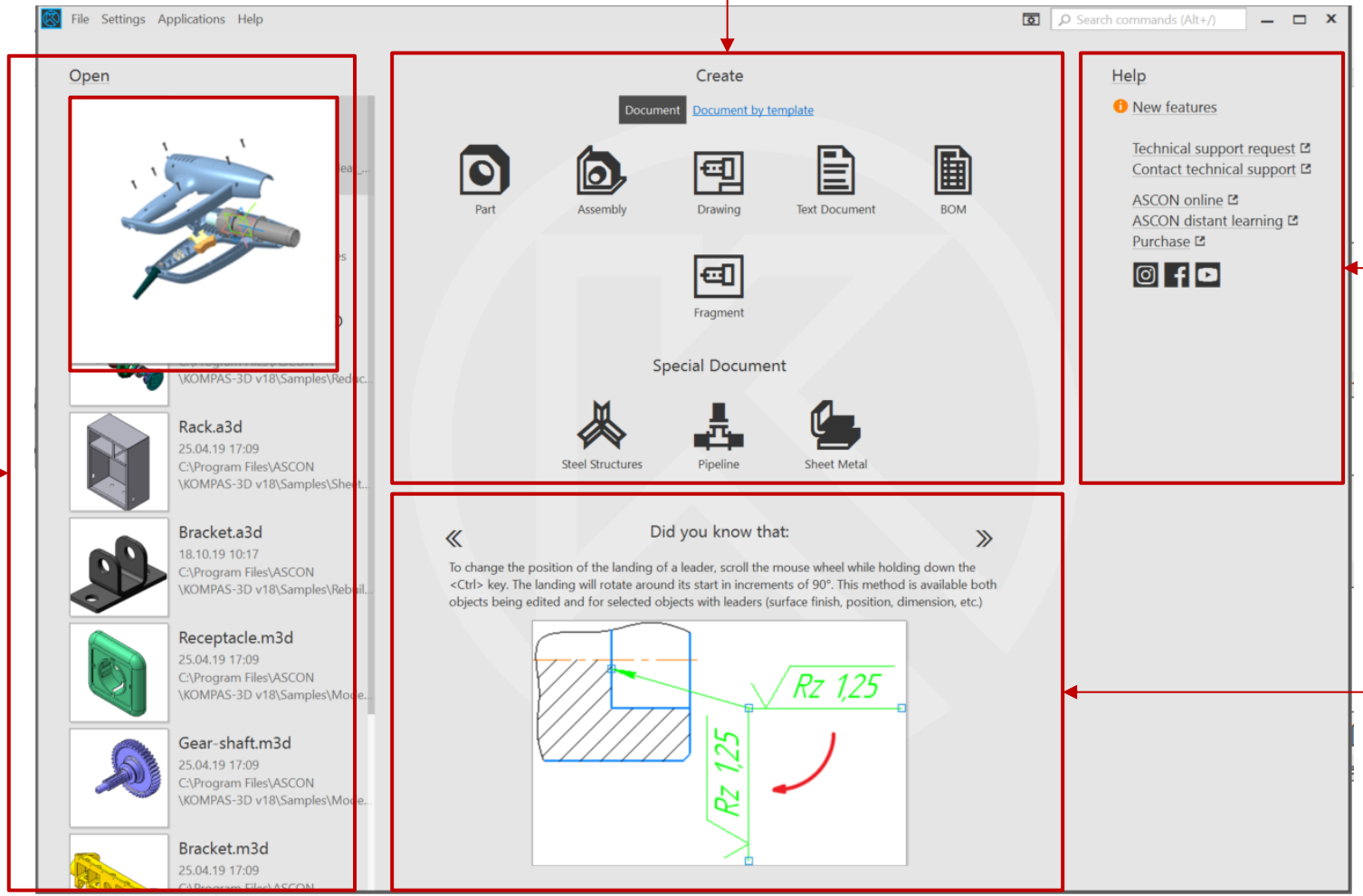

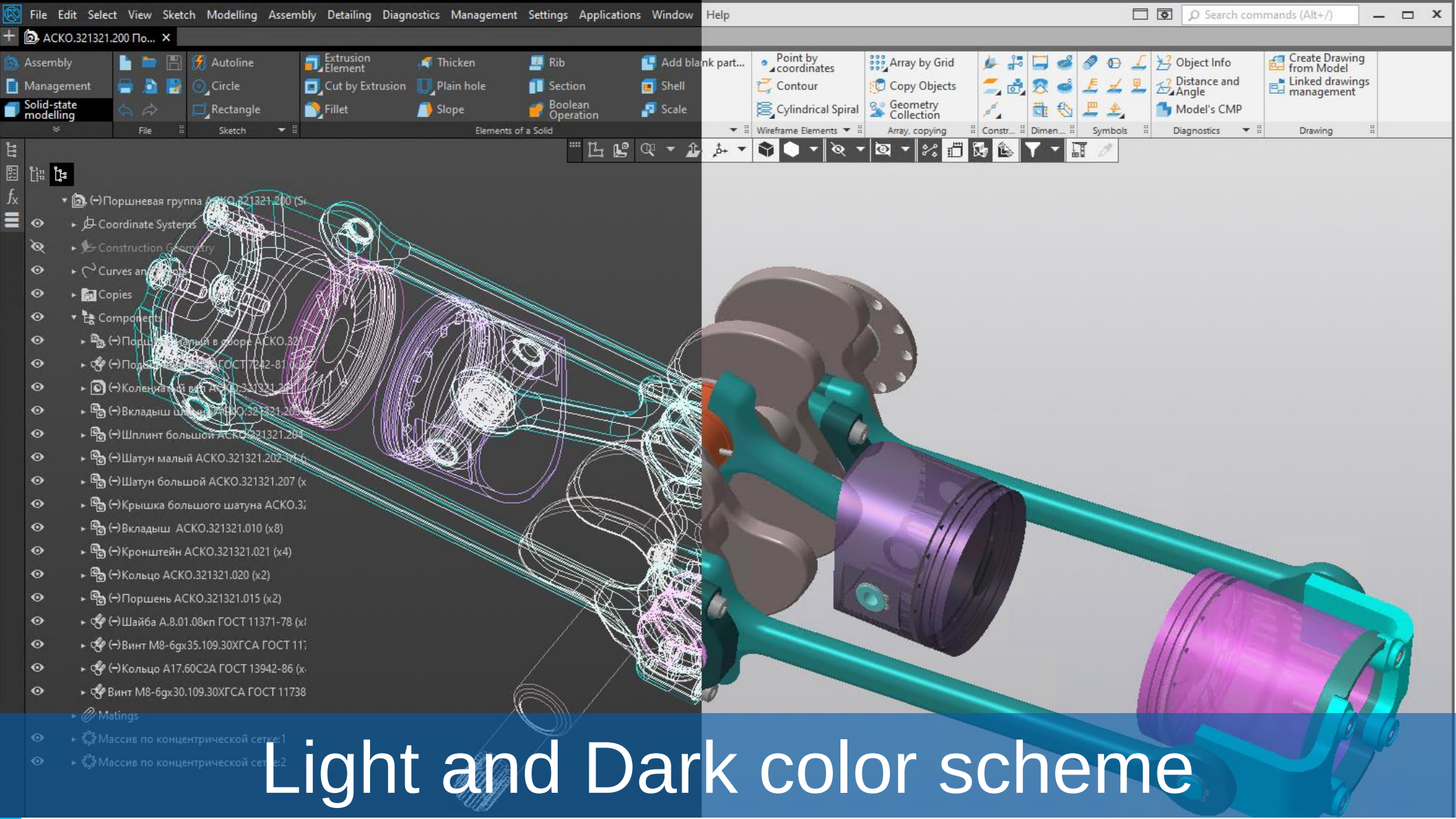

Light and Dark color scheme

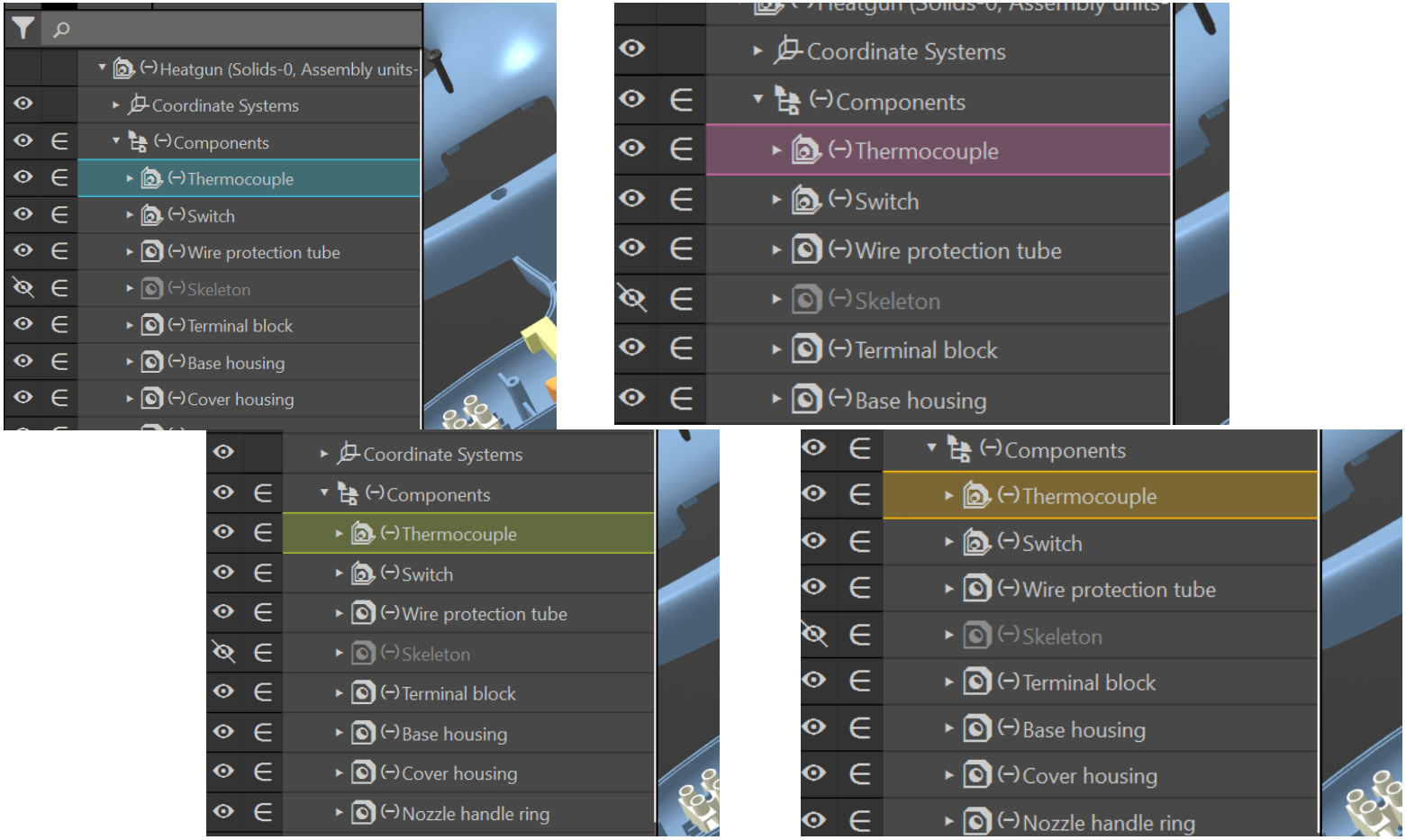

Various color schemes and mode settings

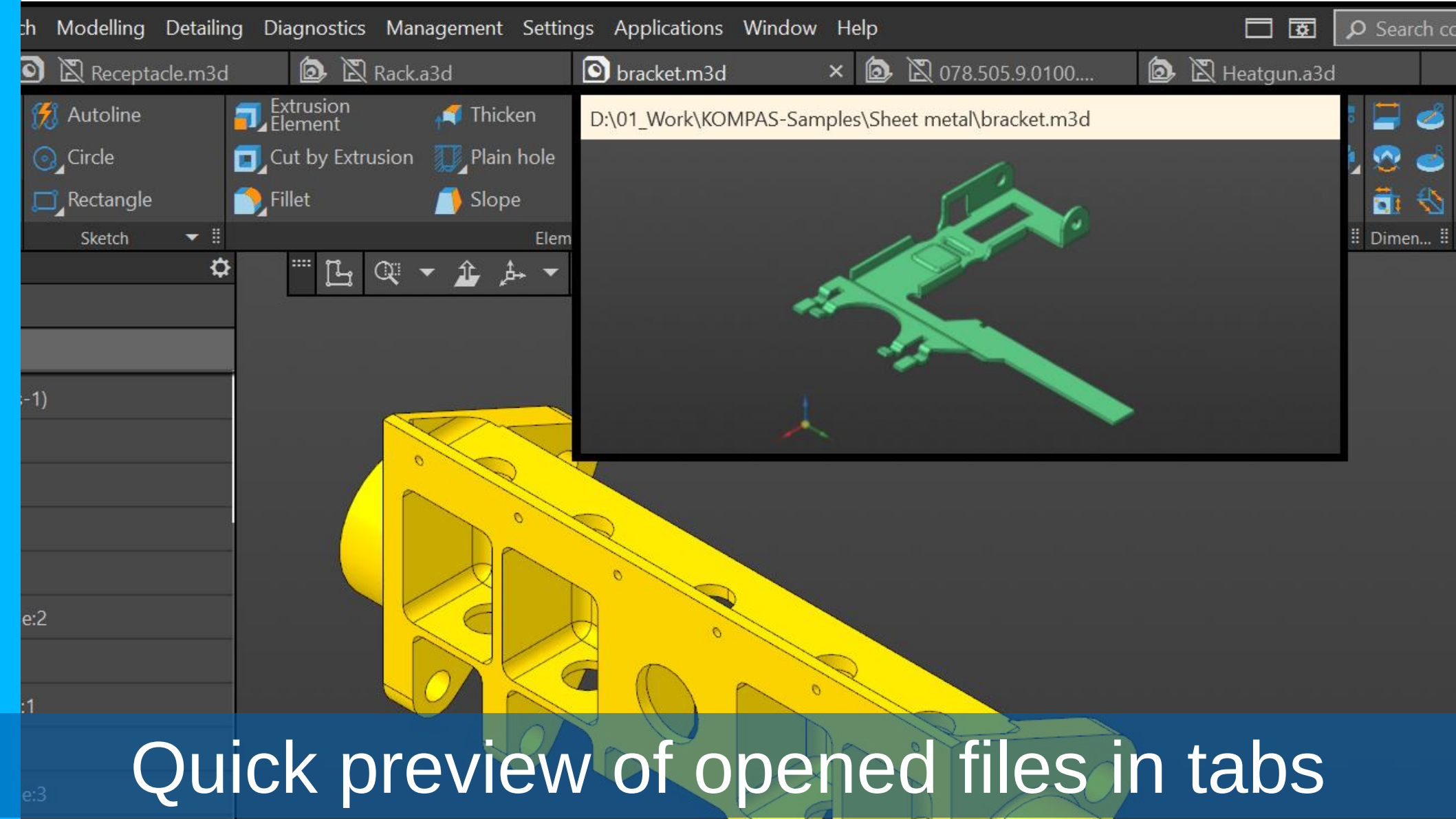
Modelling
Detailing
Diagnostics
Management
Settings
Applications
Window
Help
Search co
Receptacle.m3d
Rack.a3d
bracket.m3d
078.505.9.0100....
Heatgun.a3d
Autoline
Circle
Rectangle
Sketch
Extrusion Element
Cut by Extrusion
Fillet
Thicken
Plain hole
Slope
Elem
D:\01_Work\KOMPAS-Samples\Sheet metal\bracket.m3d
Dimen...
Quick preview of opened files in tabs

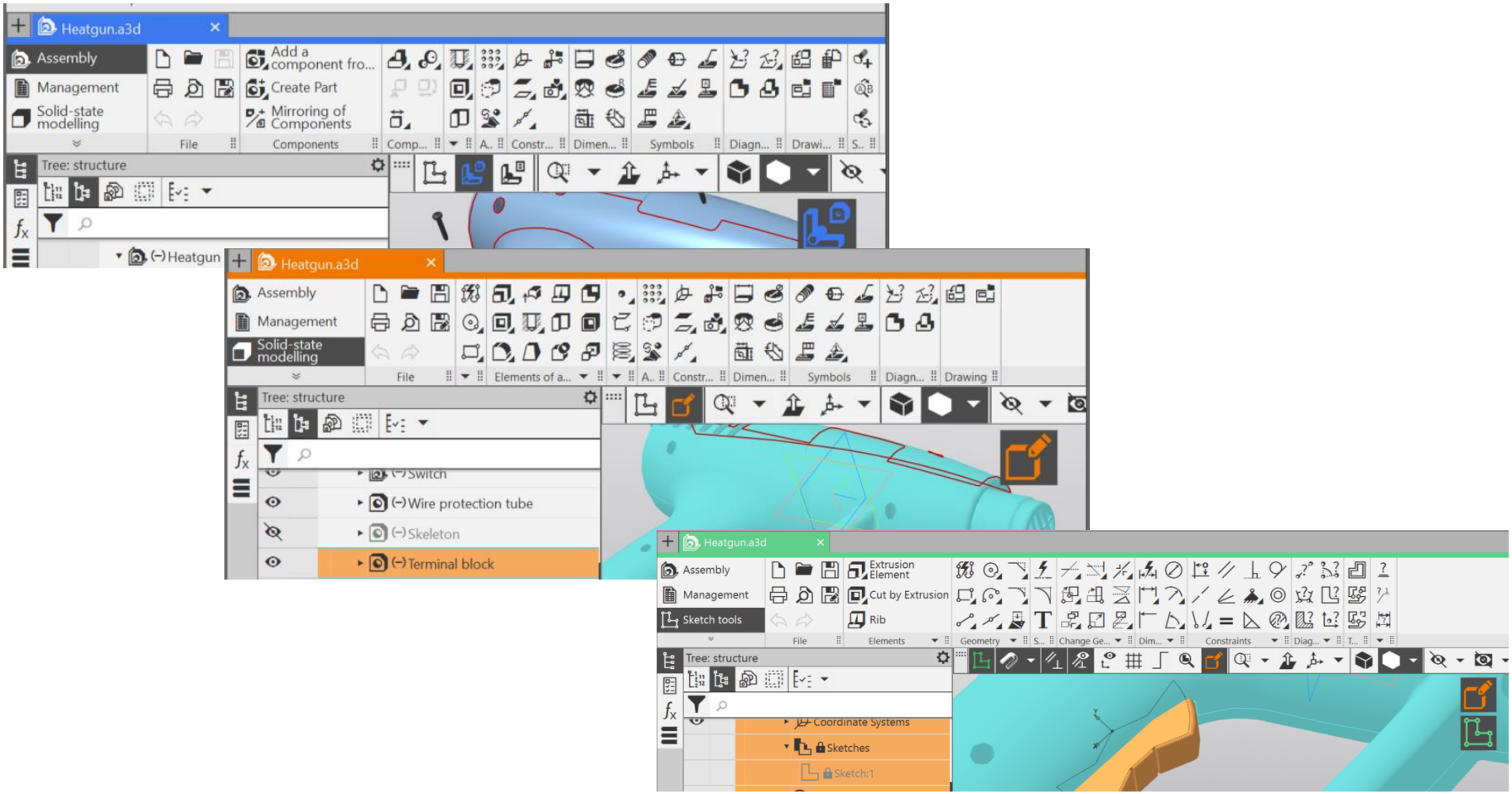

Modes Color indication

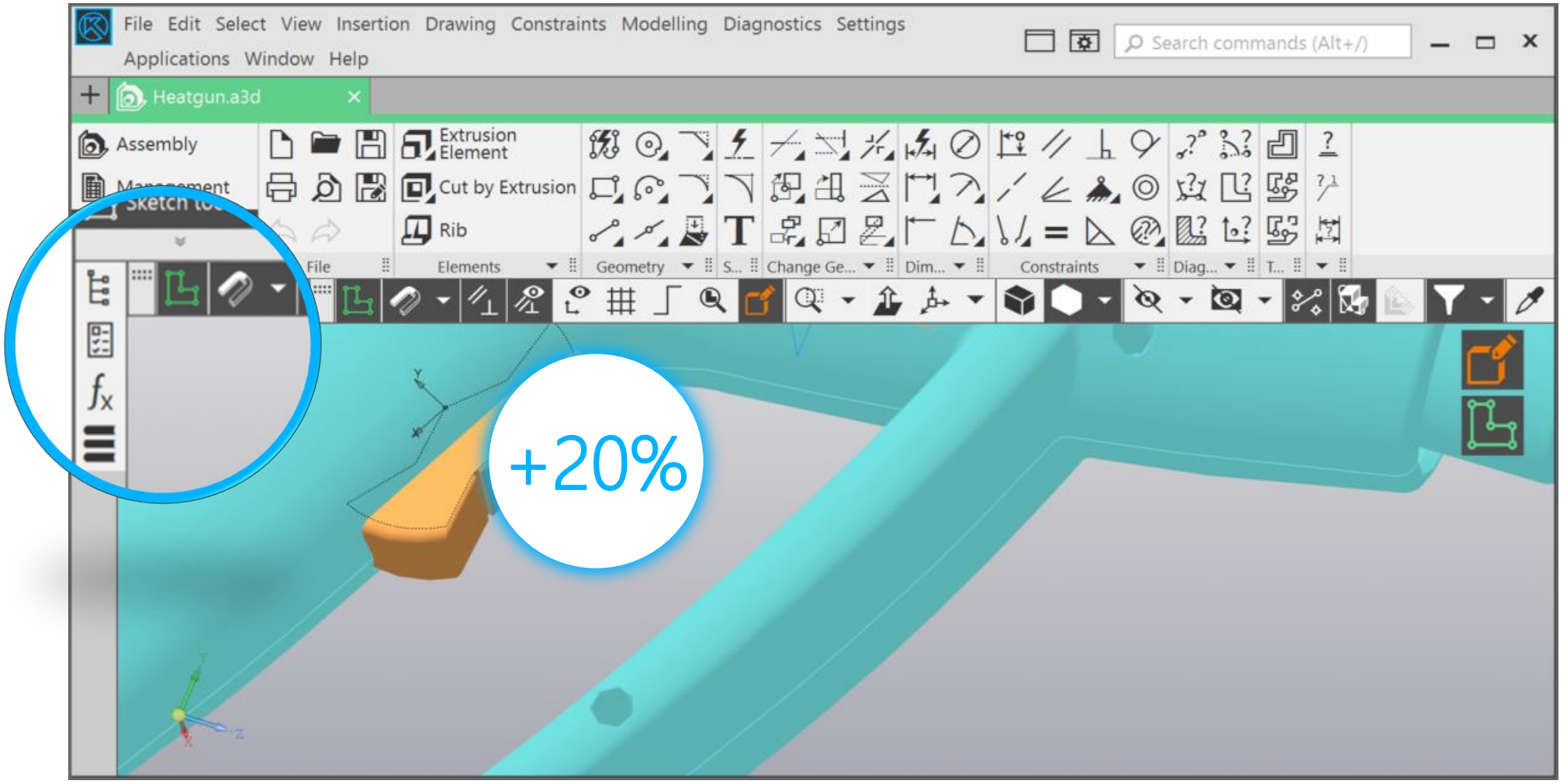

Hidden toolbars

File Settings Applications Help

Search commands (Alt+/)

Open

Gear-shaft.m3d
22.05.19 15:06
D:\Samples\Models\Gear-shaft.m3d

Bracket.m3d
22.05.19 15:06
D:\Samples\Models\Bracket.m3d

078.505.9.0100.00.A3D
22.05.19 15:07
D:\Samples\Reducer\078.505.9.0100.00.A3D

bracket.m3d
22.05.19 15:07
D:\01_Work\00_Внешние_рынки\Samples\Sheet metal\bracket.m3d

00_Внешние_рынки\Samples\Reduc...
22.05.19 15:07
D:\01_Work\00_Внешние_рынки\Samples\Reducer\078.505.9.0100.00.A3D

078.505.0.0101.00.m3d
22.05.19 15:07
D:\01_Work\00_Внешние_рынки\Samples\Reducer\078.505.0.0101.00.m3d

Hydromotor MGP-315.00.00 _ ABCD...
28.04.20 02:50
D:\01_Work\00_Внешние_рынки\00_Presentations\KOMPAS-3D V18_Whats_New...

HYDROMOTOR MGP-315.00.00.m3d
22.05.19 15:07
D:\01_Work\00_Внешние_рынки\Samples\Reducer\OTHER\HYDROMOTOR MGP-315.00.0...

Create

Document | Document by template

Part | Assembly | Drawing | Text Document | BOM

Fragment

Special Document

Steel Structures | Pipeline | Sheet Metal

Did you know that:

If there are enough parameters set to complete an operation, you don't have to press the "Create Object" button. You can run a command from another group; meanwhile, the current command will be automatically completed, and the object created by this command will be fixed in the document.

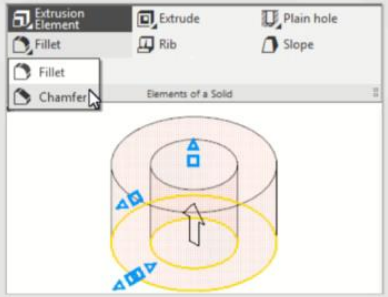

Help

New features

Technical support request
Contact technical support

ASCON online
ASCON distant learning
Purchase

Search and run commands

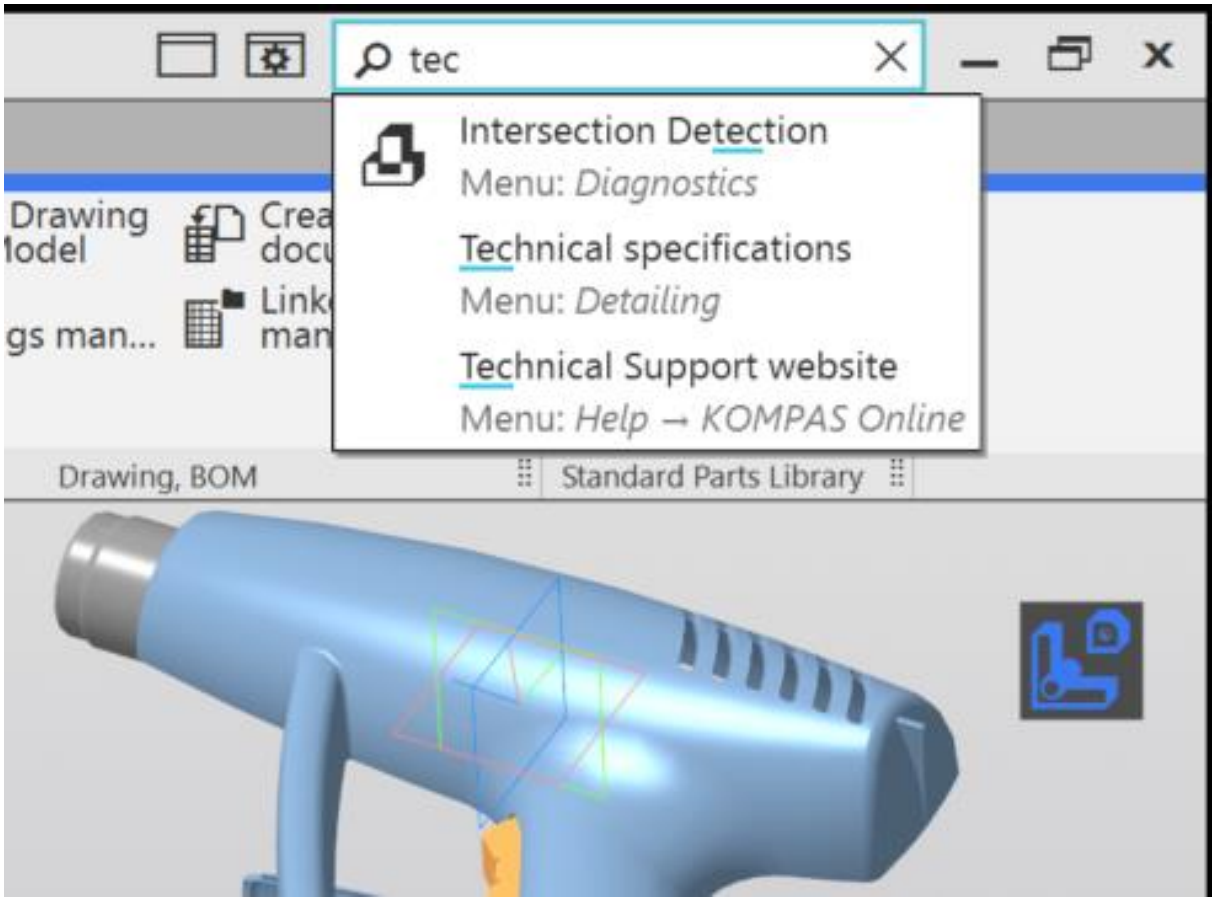

Keyboard settings

- Apply changes without closing the dialog
- Working off of the conflicts
- Print a list of hotkeys

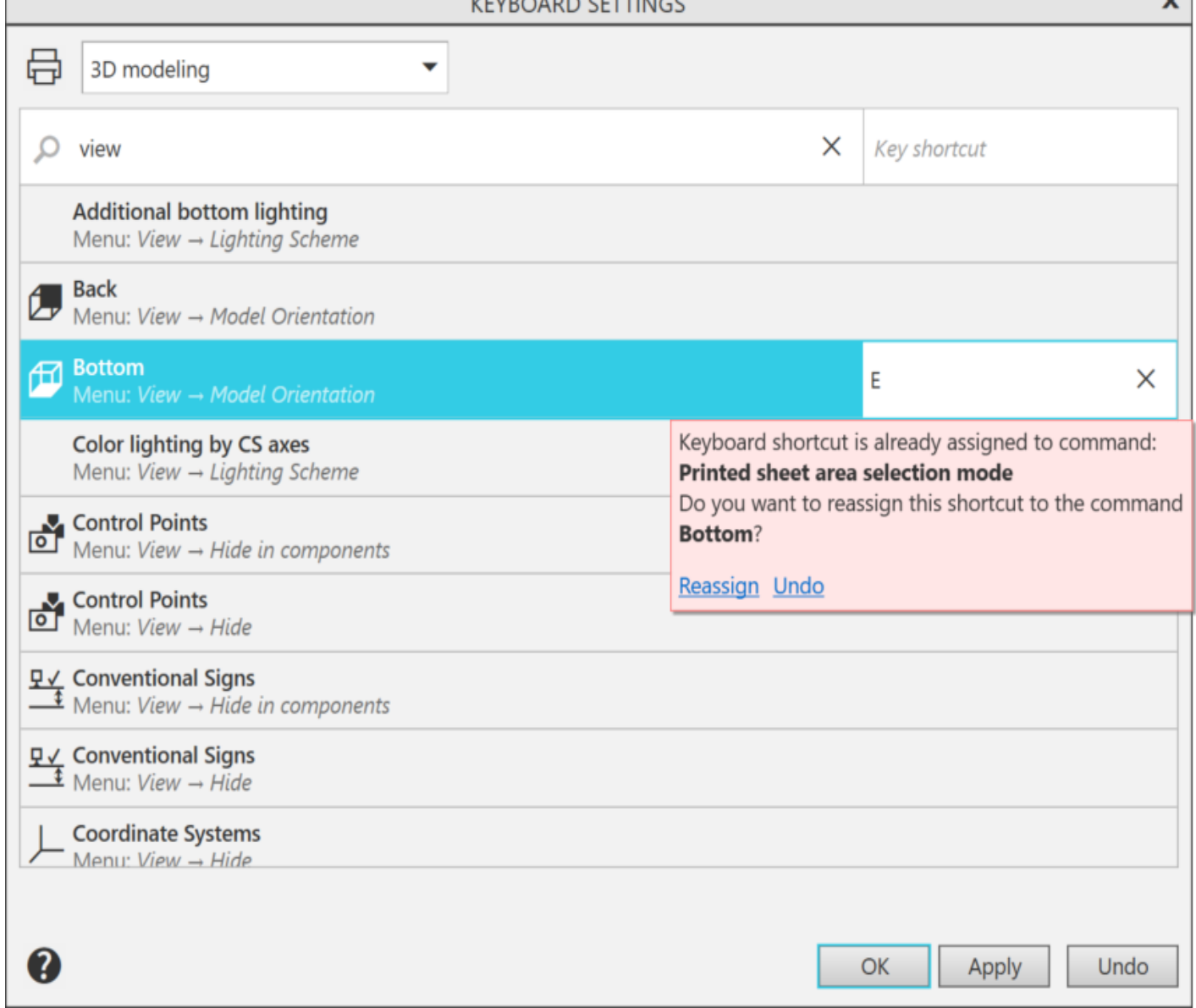

Enhanced productivity

Working with large assemblies

Process acceleration

- with 3d-model

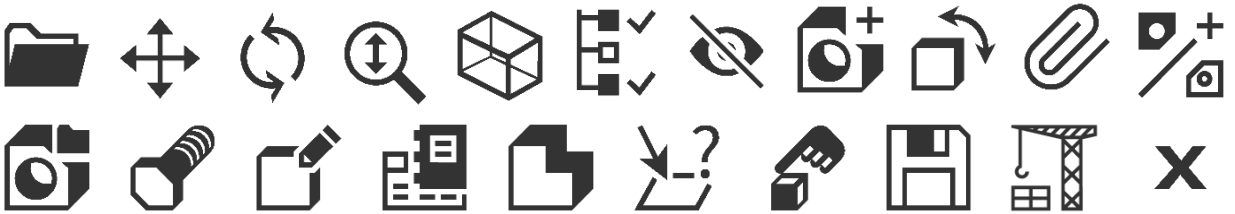

- with drawings

- With a BOM

Multithreading

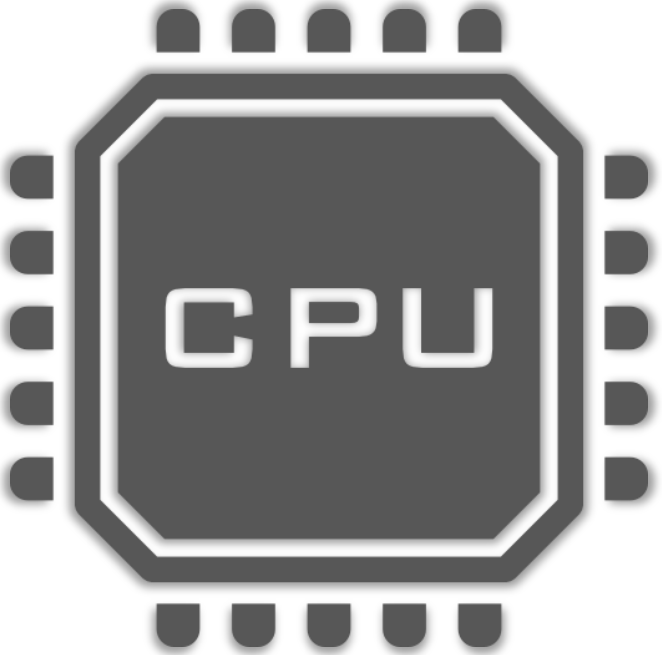

Drawings

3d-models

Calculations

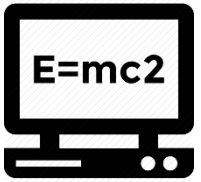

APM FEM
KompasFlow
Artisan Rendering

Fast model rendering

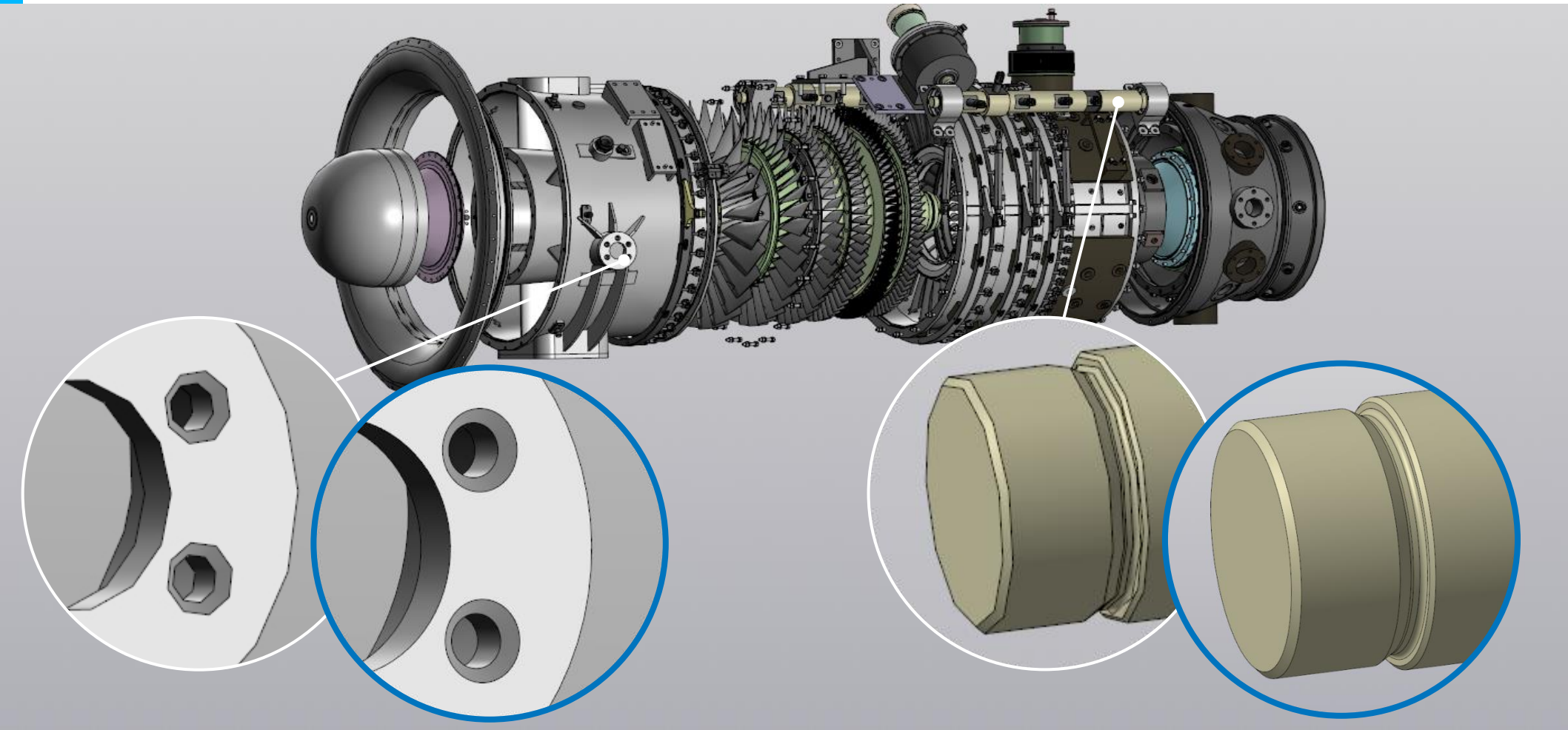

Fast rendering during rotation

400 +components

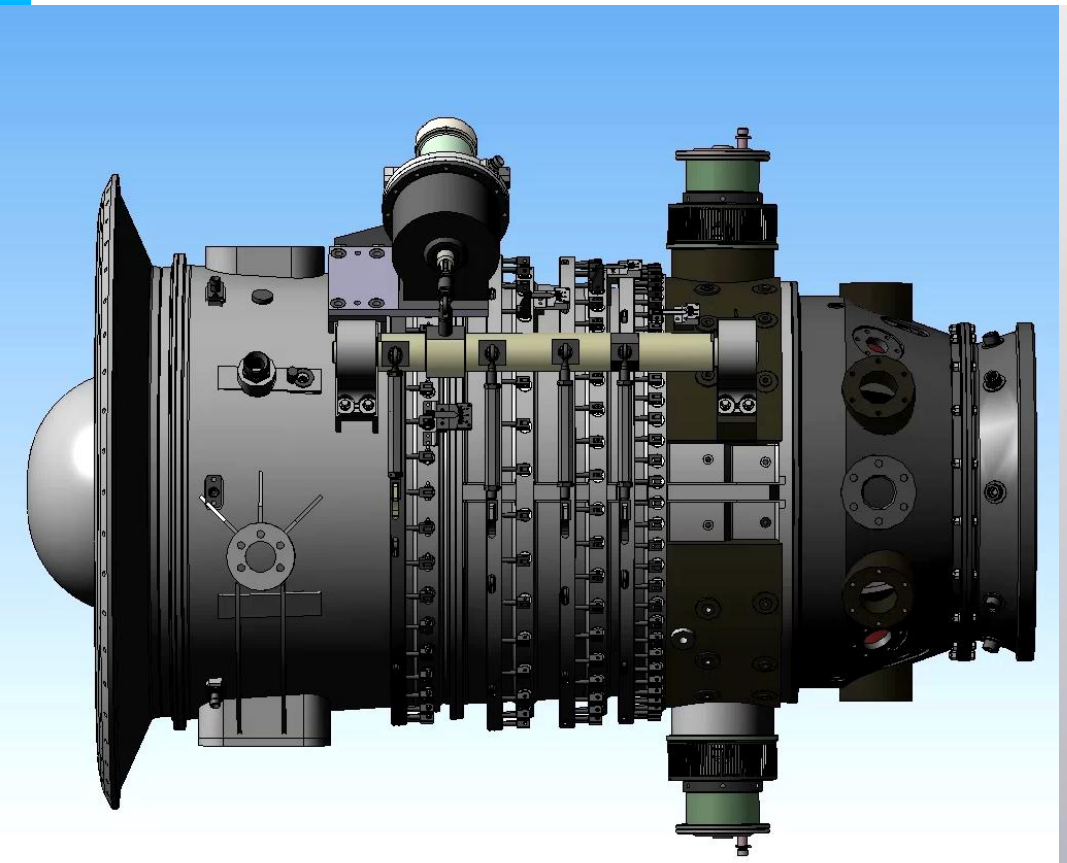

KOMPAS-3D V16

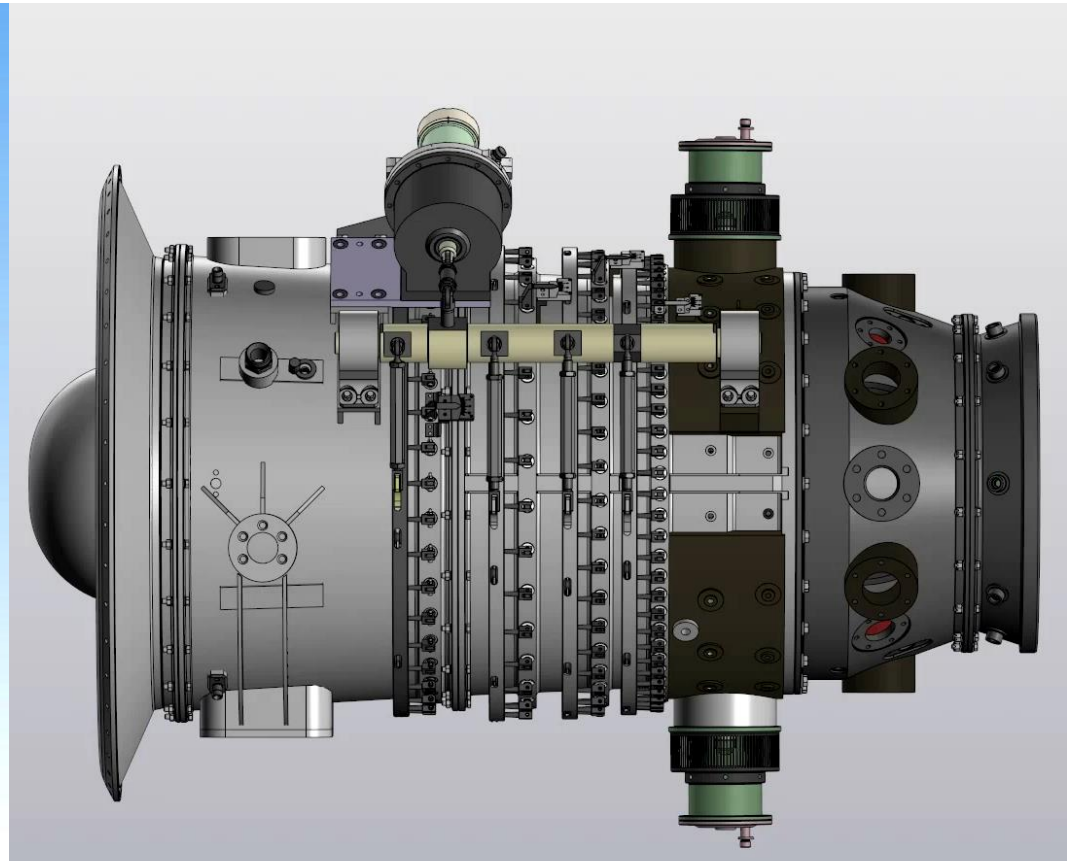

KOMPAS-3D v18

Fast rendering during rotation

100 000+components

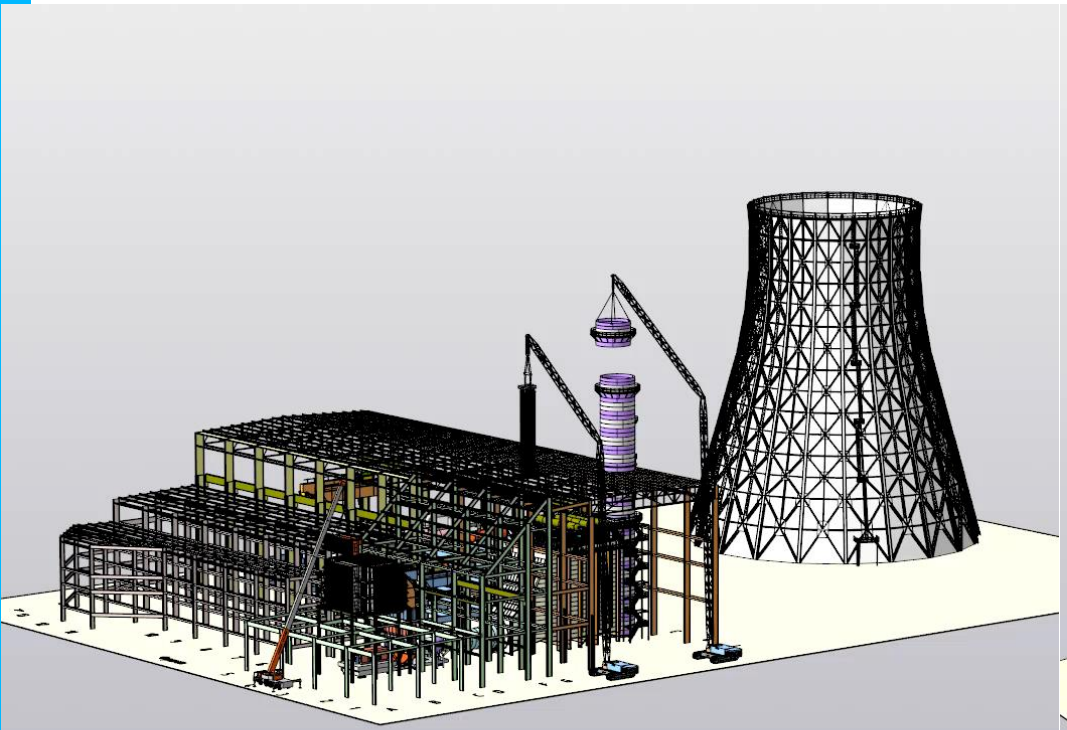

KOMPAS-3D v17

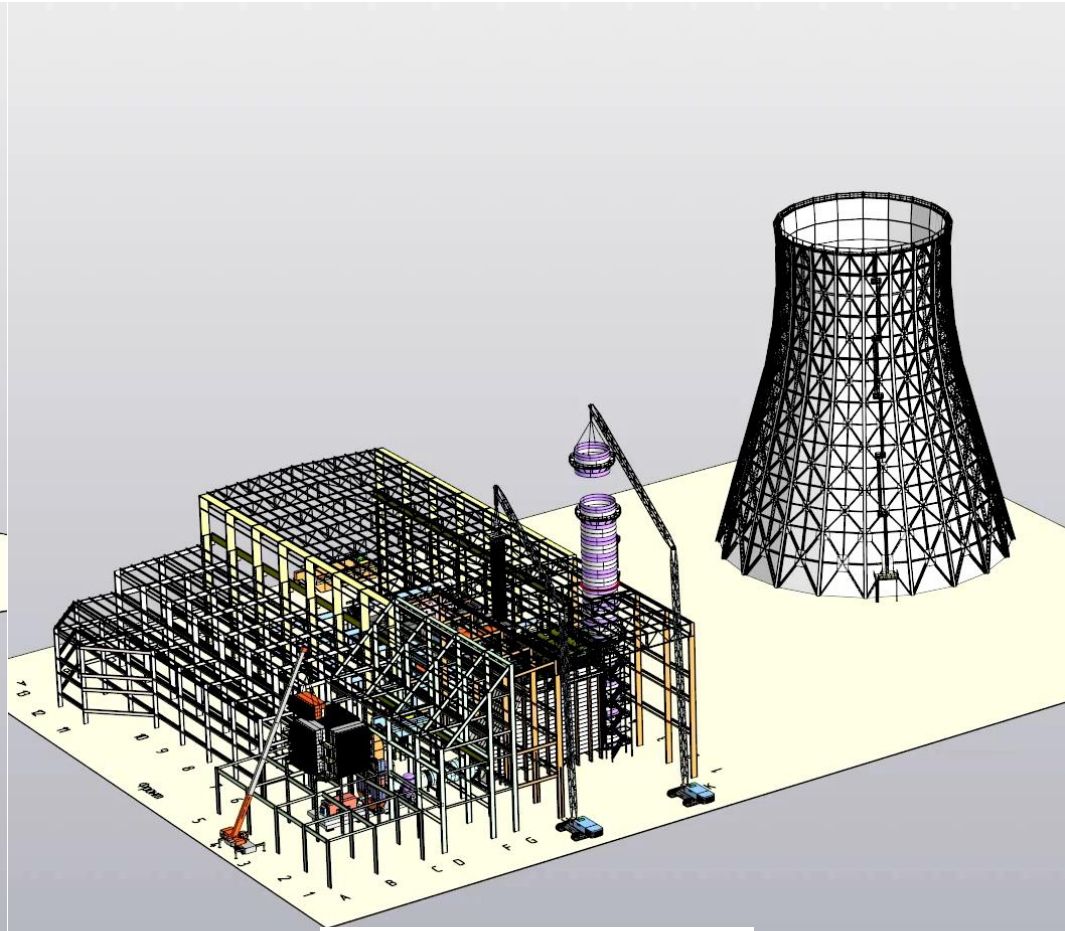

KOMPAS-3D v18

Same model during View Shift

KOMPAS-3D v17

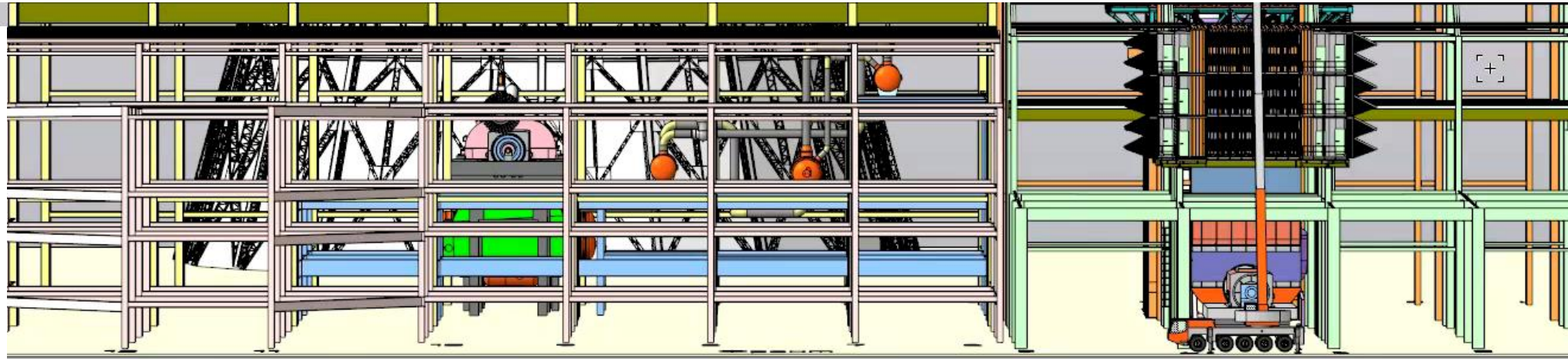

KOMPAS-3D v18

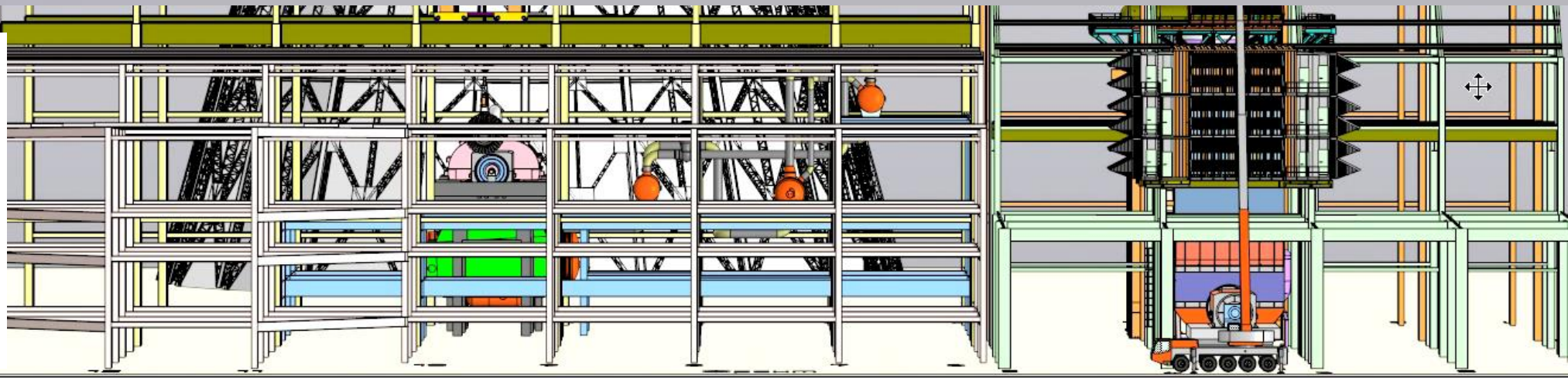

Hardware requirements

	S	L	**XXL**
OS	x86, x64	**x64**	
CPU, GHz	OS^{min}	≥3	**≥4**
Memory RAM, GB	OS^{min}	≥8	**≥16**
Video	OpenGL 2.0	**NVIDIA OpenGL 4.5**	
Video memory, GB	OS^{min}	≥2	**≥4**

Acceleration effects

Combined cycle gas turbine
"TRUST NWEM" (St. Petersburg)
Number of components: 100,774

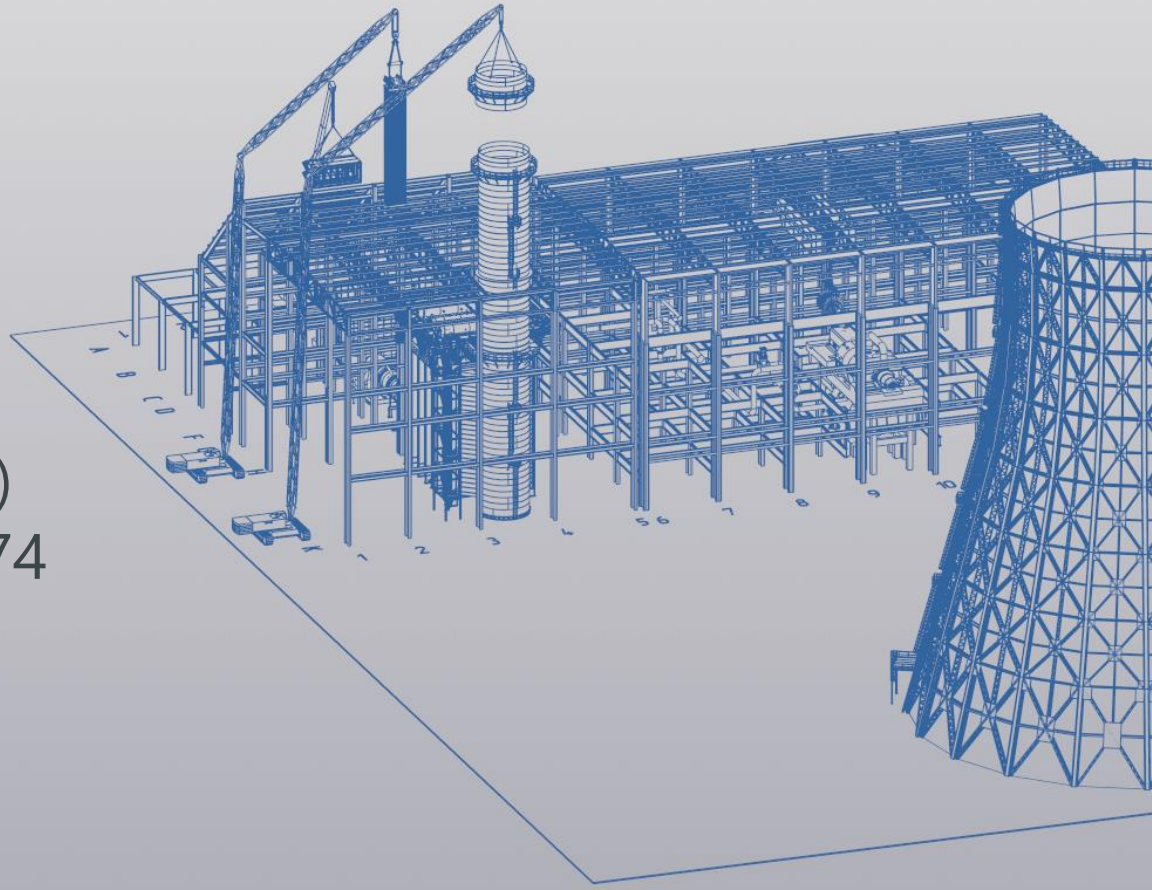

Hardware parameters
OS: Win10 x64 Pro **CPU: Intel Core i7-6700K, 4 GHz, 32 Gb** **GPU: NVIDIA Quadro P2000, 5 Gb**

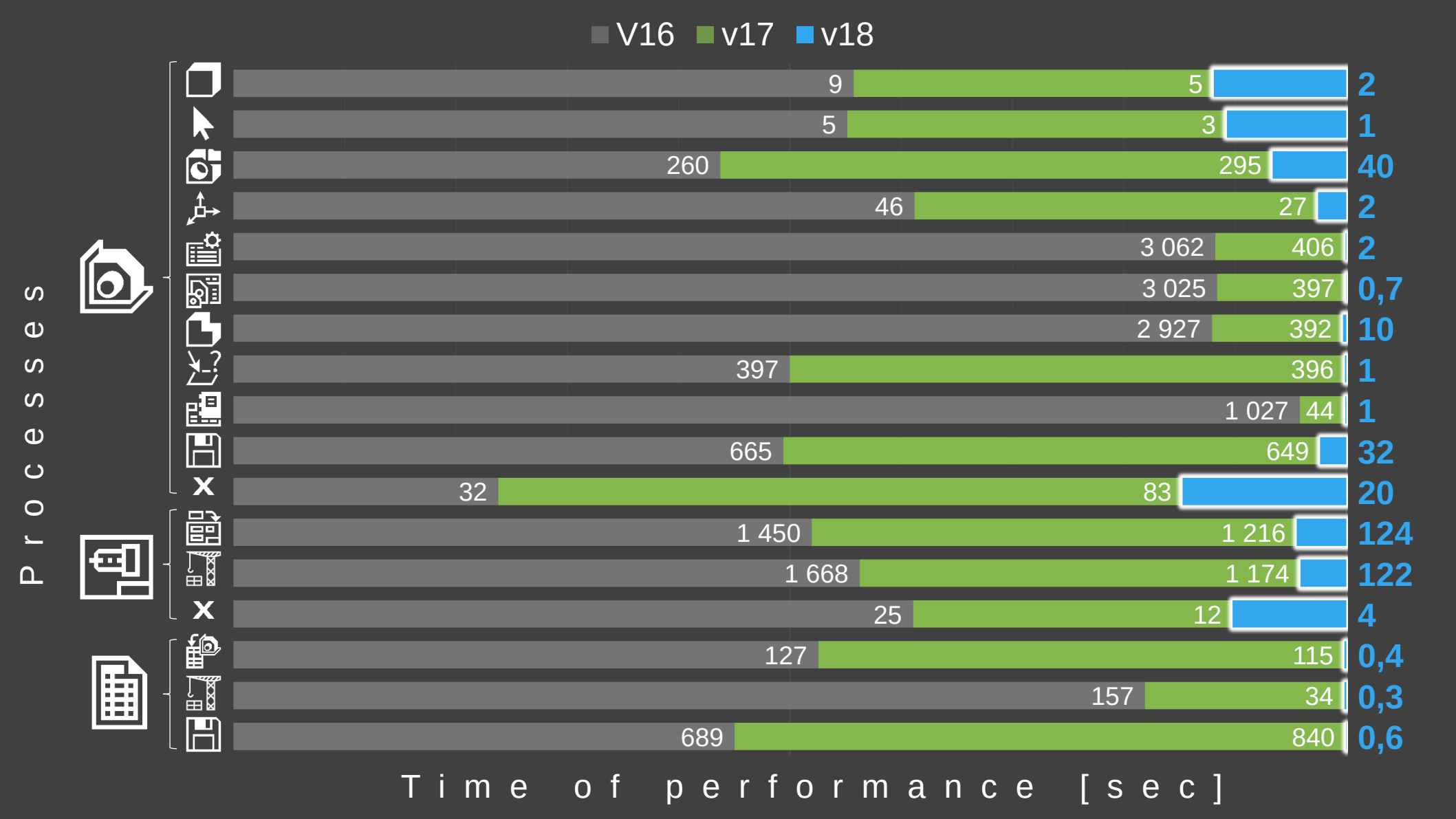
V16
v17
v18
Processes
9
5
2
5
3
1
260
295
40
46
27
2
3 062
406
2
3 025
397
0,7
2 927
392
10
397
396
1
1 027
44
1
665
649
32
32
83
20
1 450
1 216
124
1 668
1 174
122
25
12
4
127
115
0,4
157
34
0,3
689
840
0,6
Time of performance [sec]

Acceleration effects

∑ [h:min:sec]

Total time of 17 process measurements

V16	v17	**v18**
04:19:31	01:41:28	**00:06:02**

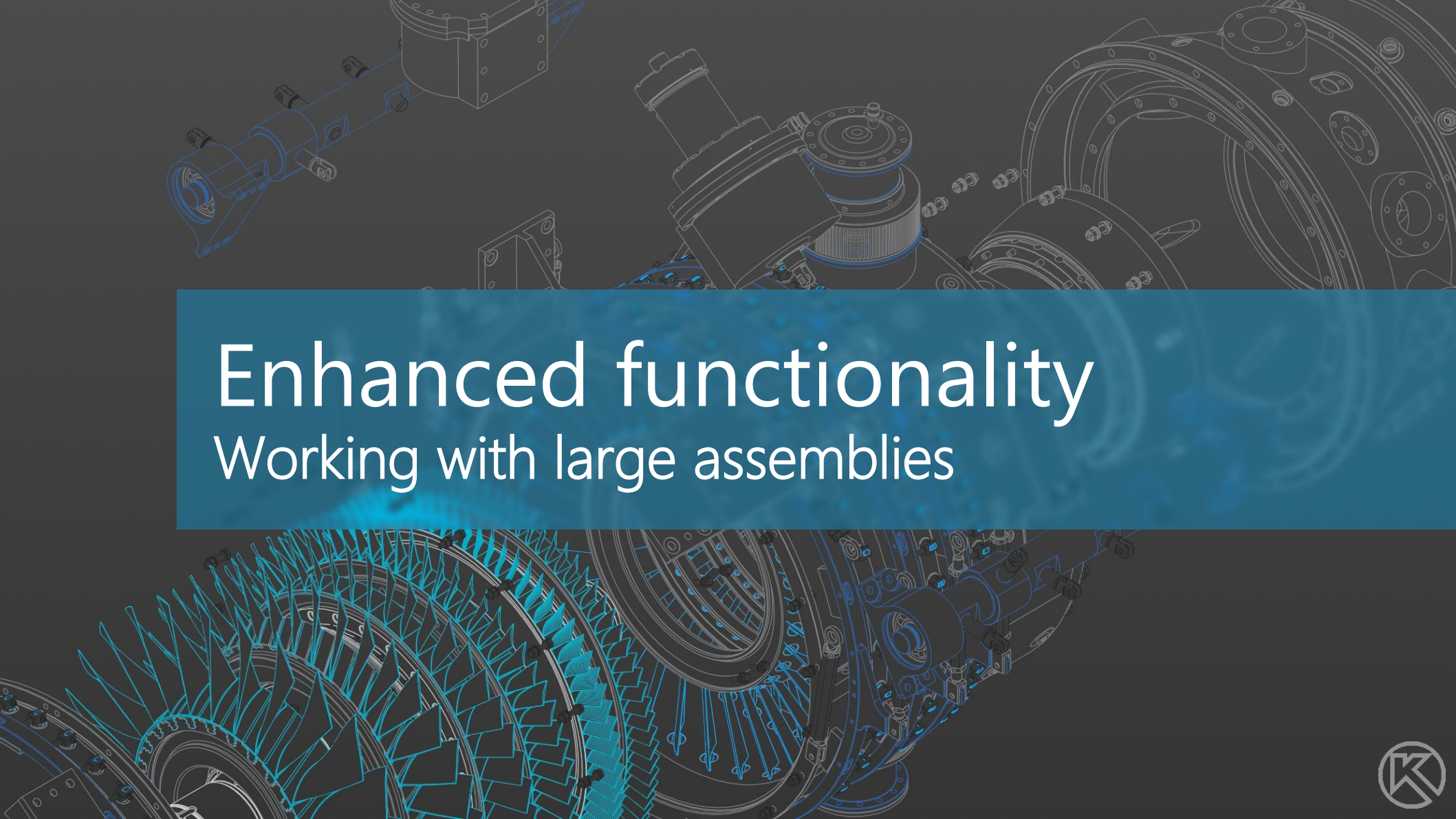

Enhanced functionality

Working with large assemblies

Layout geometry – get the real power of prototyping.

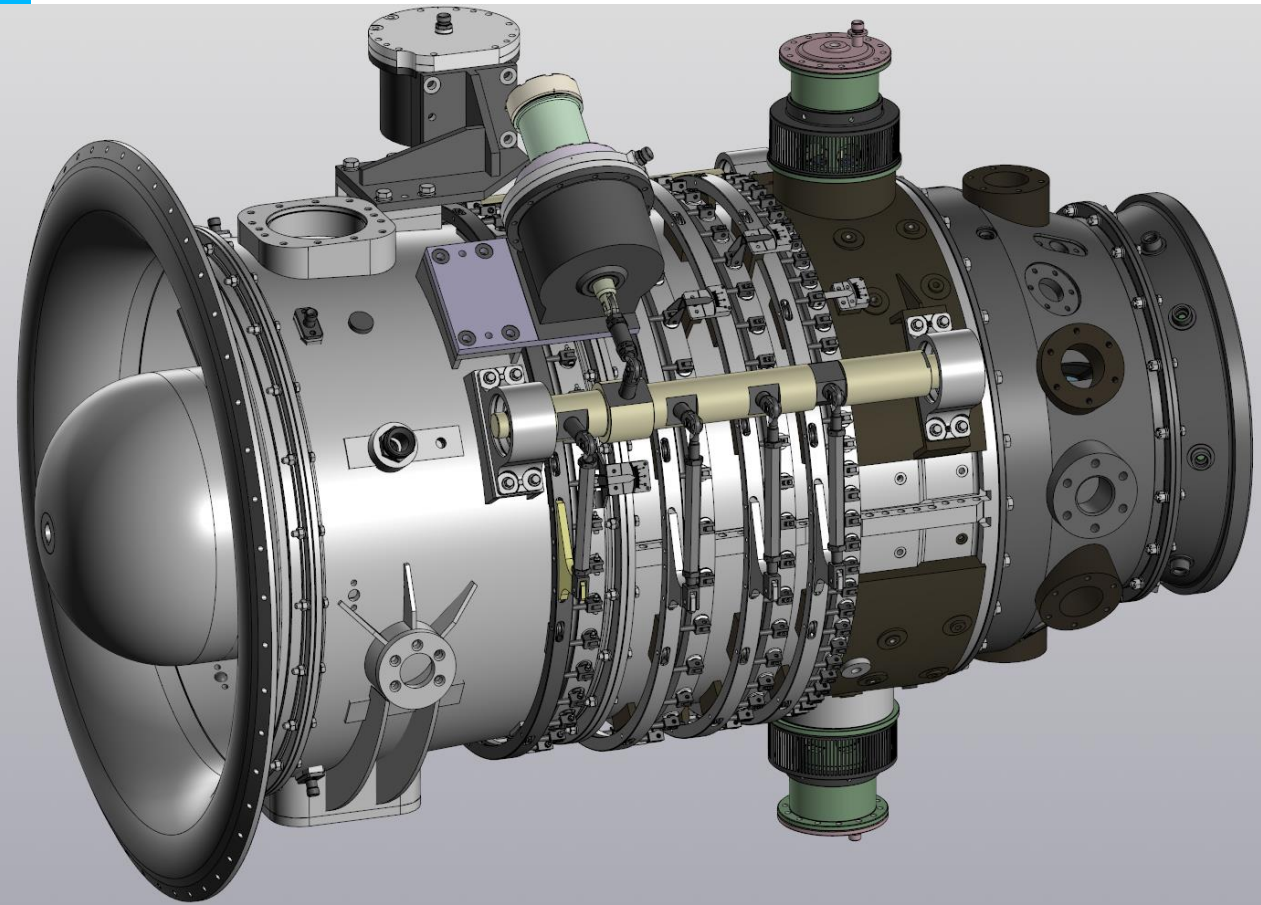

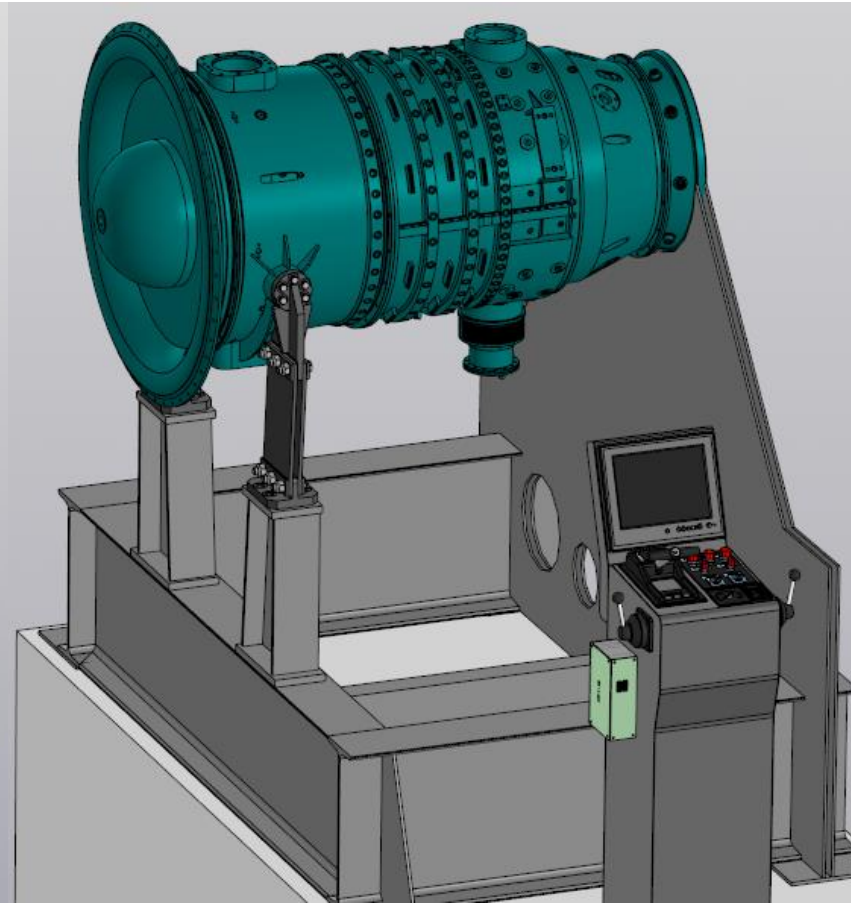

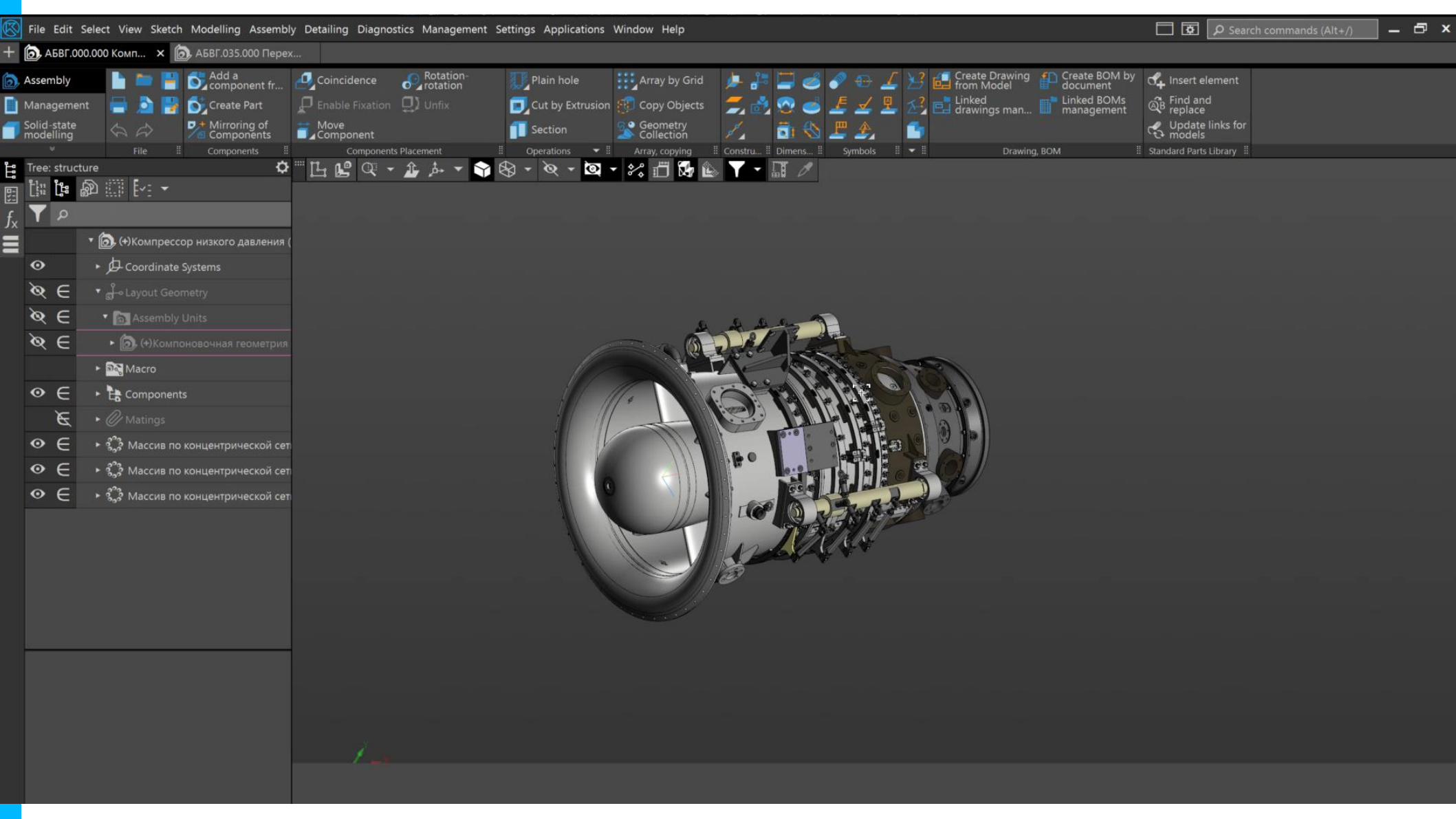
File Edit Select View Sketch Modelling Assembly Detailing Diagnostics Management Settings Applications Window Help
Search commands (Alt+/)
АБВГ.000.000 Комп...
АБВГ.035.000 Перех...
Assembly
Management
Solid-state modelling
File
Add a component fr...
Create Part
Mirroring of Components
Components
Coincidence
Rotation-rotation
Enable Fixation
Unfix
Move Component
Components Placement
Plain hole
Cut by Extrusion
Section
Operations
Array by Grid
Copy Objects
Geometry Collection
Array, copying
Constru...
Dimens...
Symbols
Create Drawing from Model
Create BOM by document
Linked drawings man...
Linked BOMs management
Drawing, BOM
Insert element
Find and replace
Update links for models
Standard Parts Library
Tree: structure
(+)Компрессор низкого давления (
Coordinate Systems
Layout Geometry
Assembly Units
(+)Компоновочная геометрия
Macro
Components
Matings
Массив по концентрической сет
Массив по концентрической сет
Массив по концентрической сет

Draft projecting

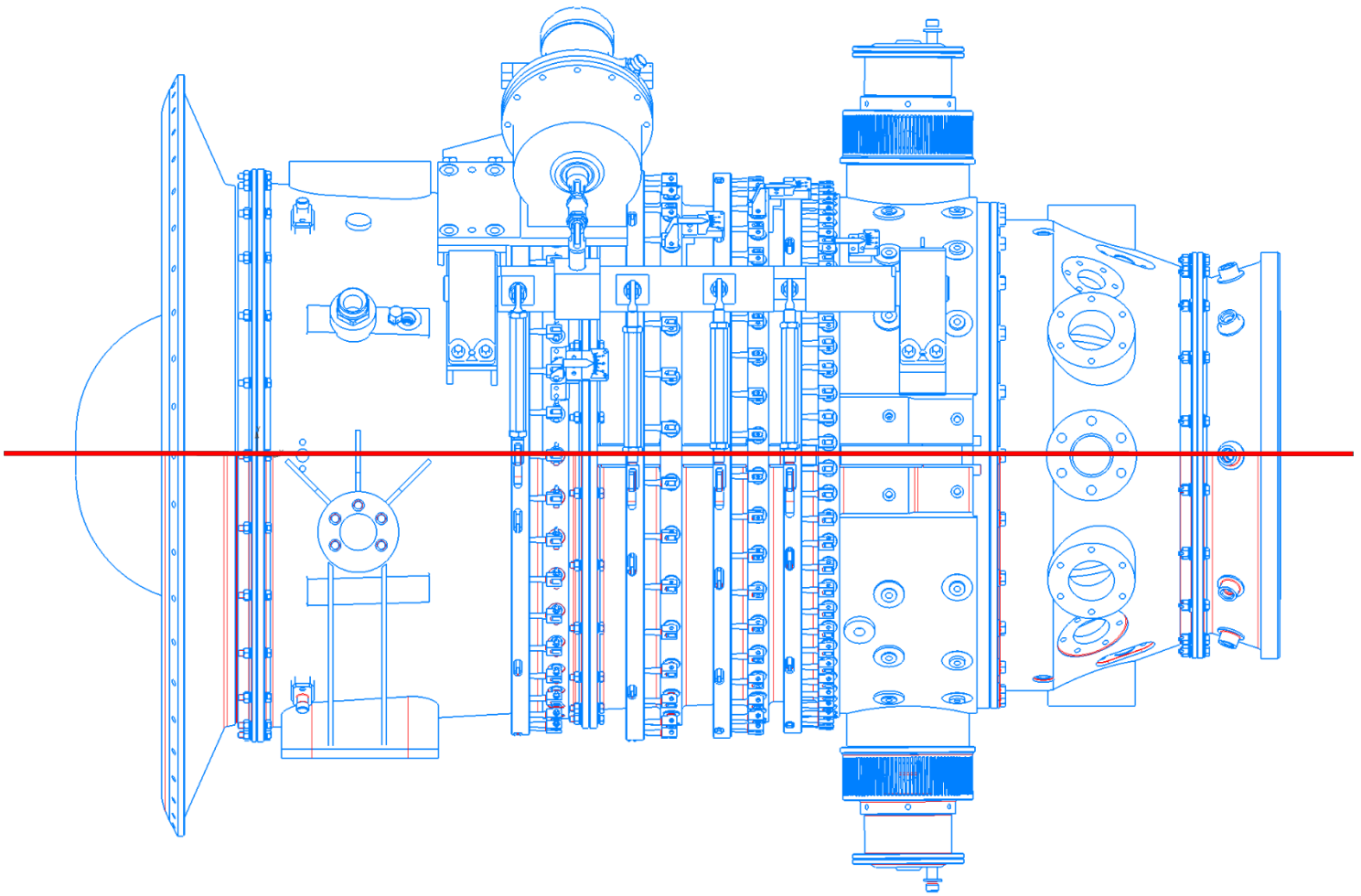

Rebuild selected view

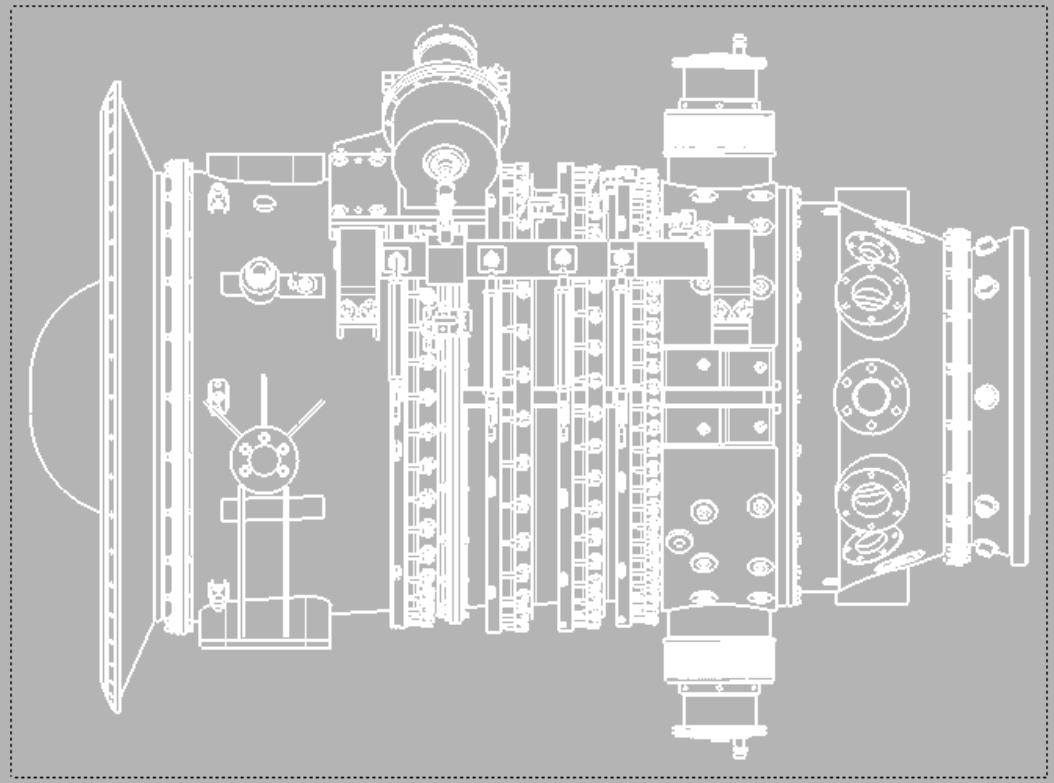

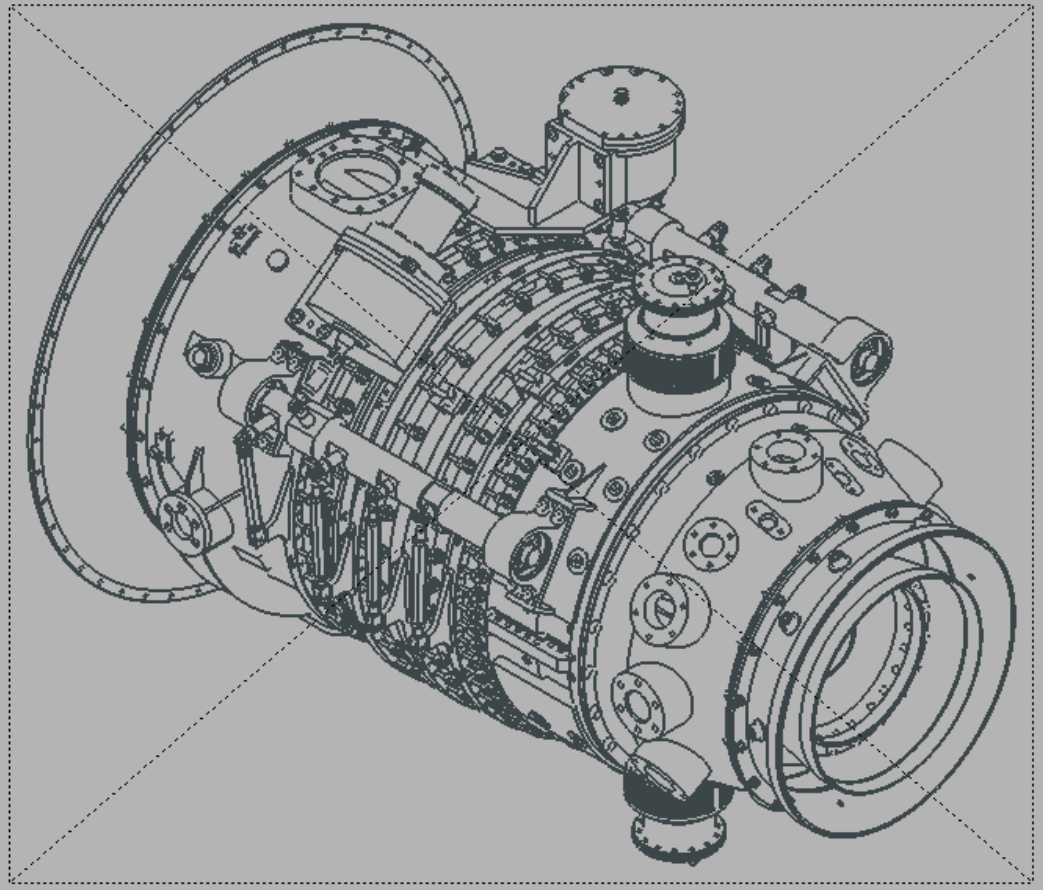

3D-functionality improvements

New fillets

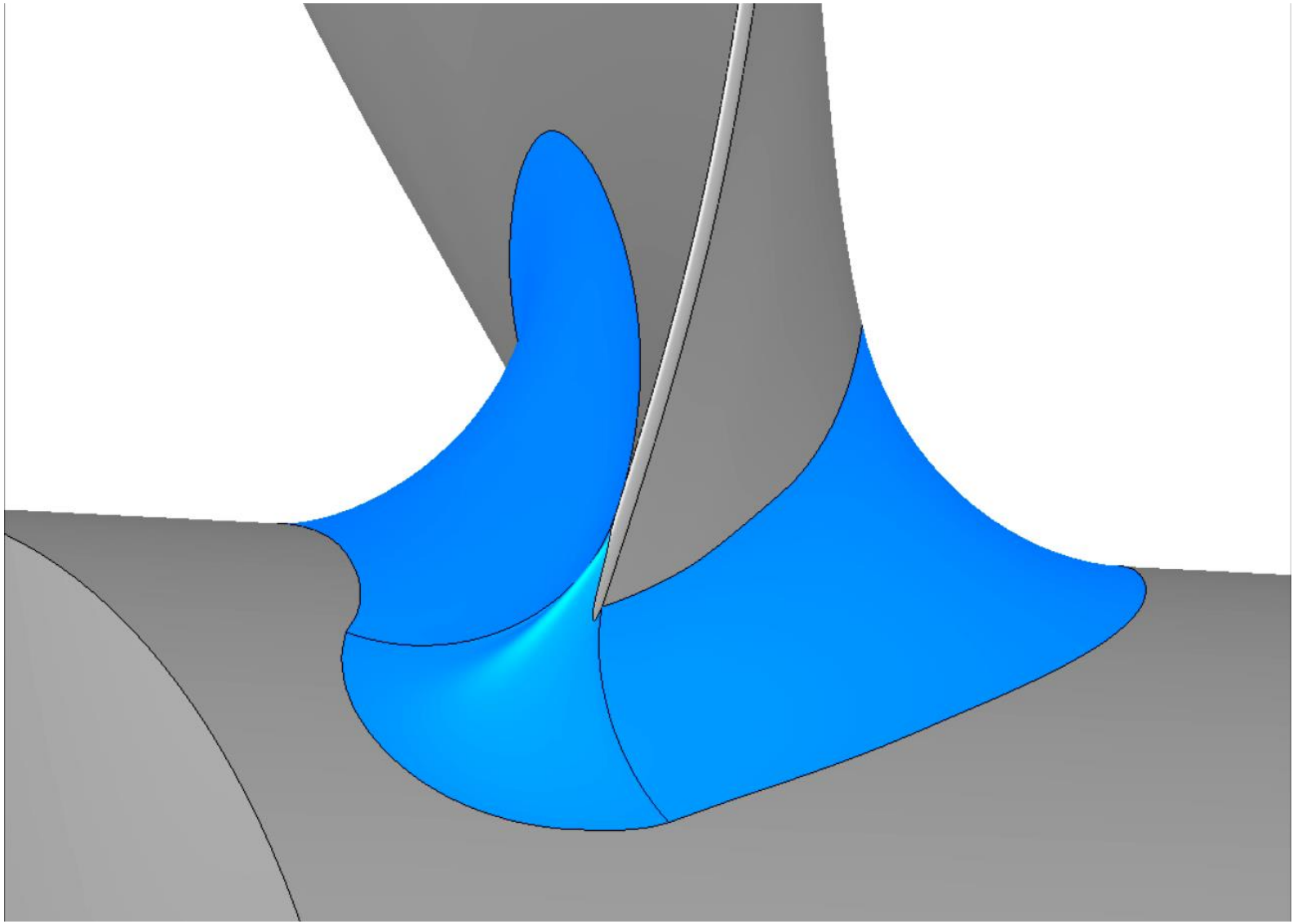

New holes

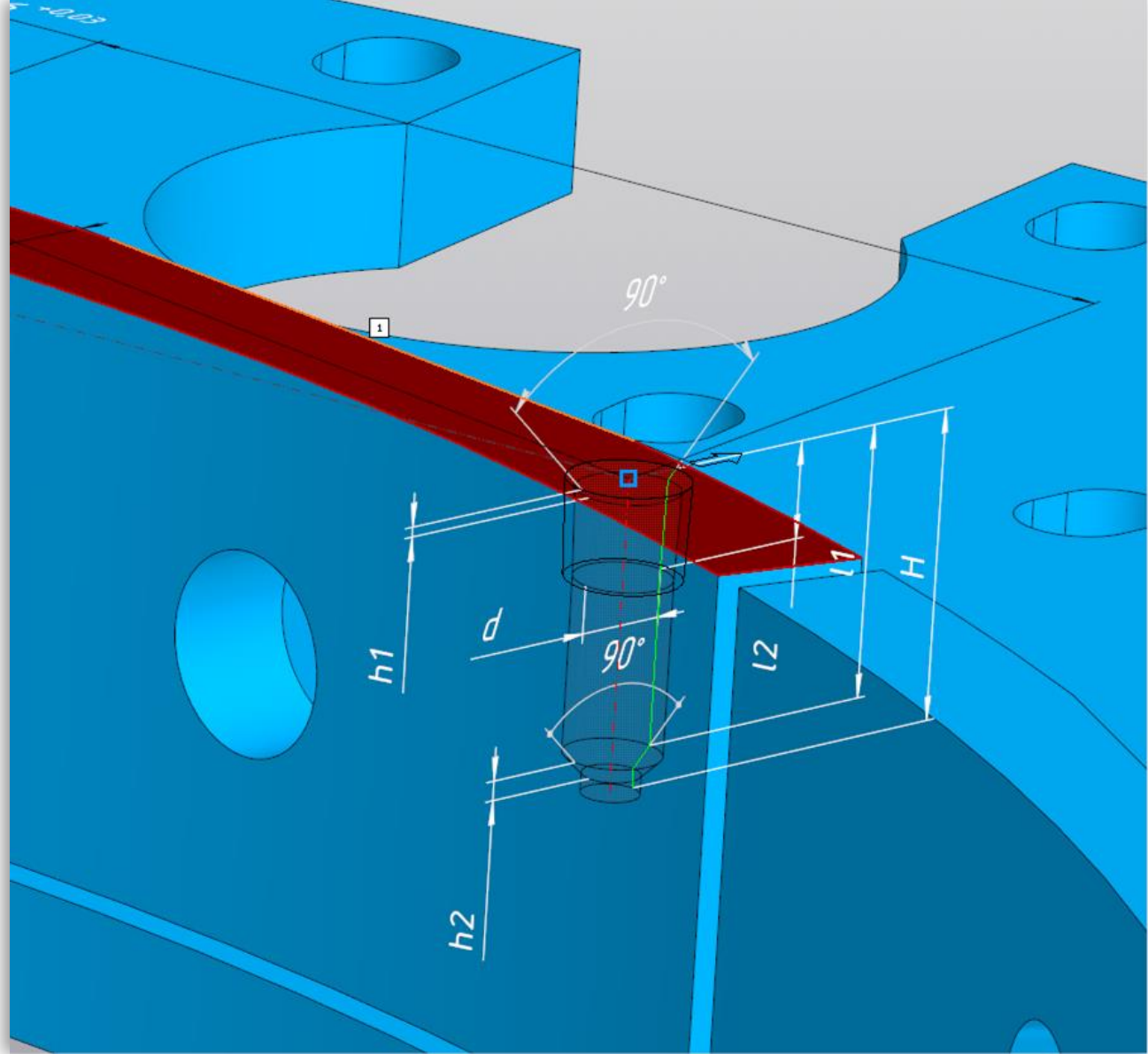

Inserting group pf components to assembly

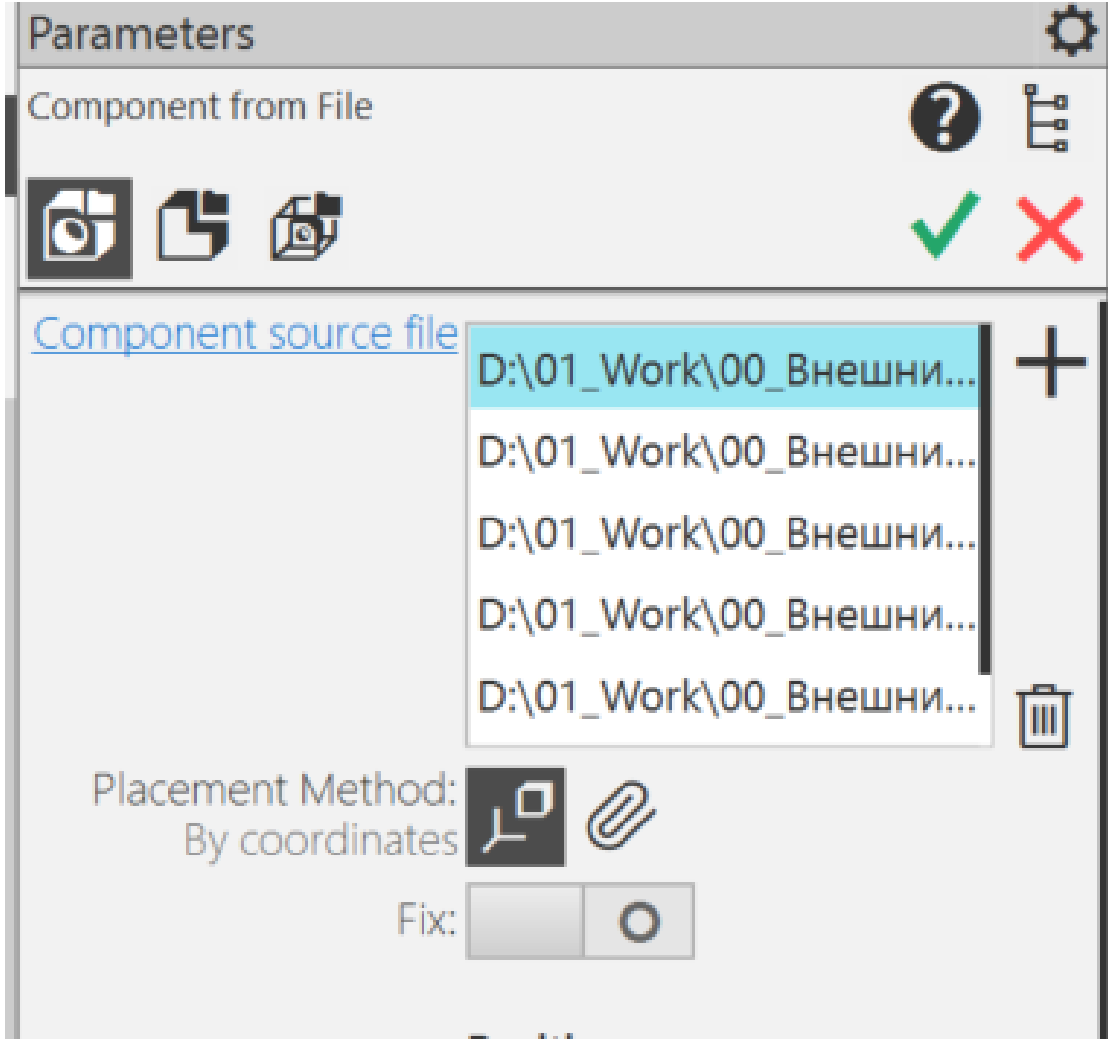

Realistic transparency (comeback)

Projection of external contour lines to Sketch

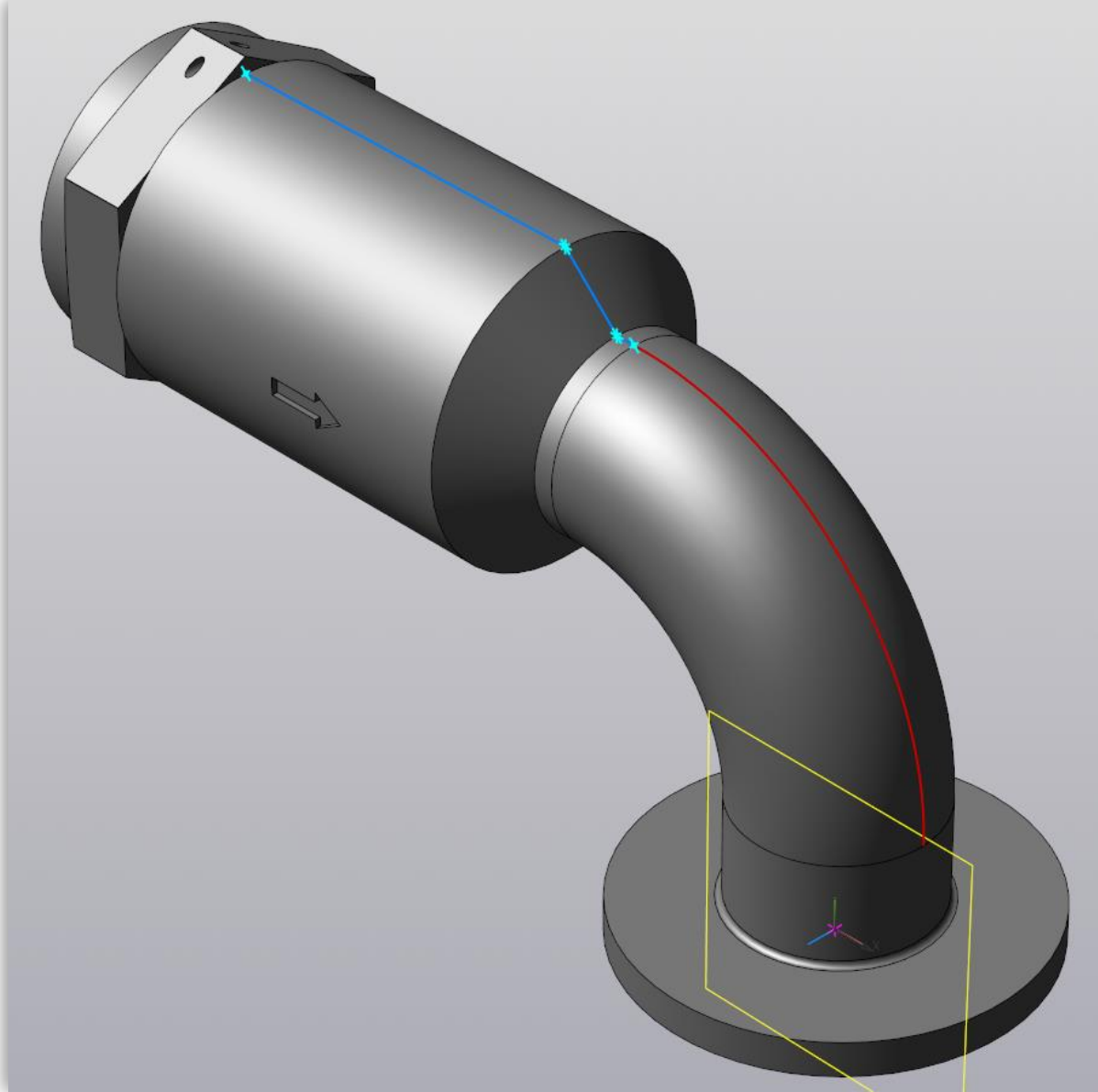

Centerlines in the model

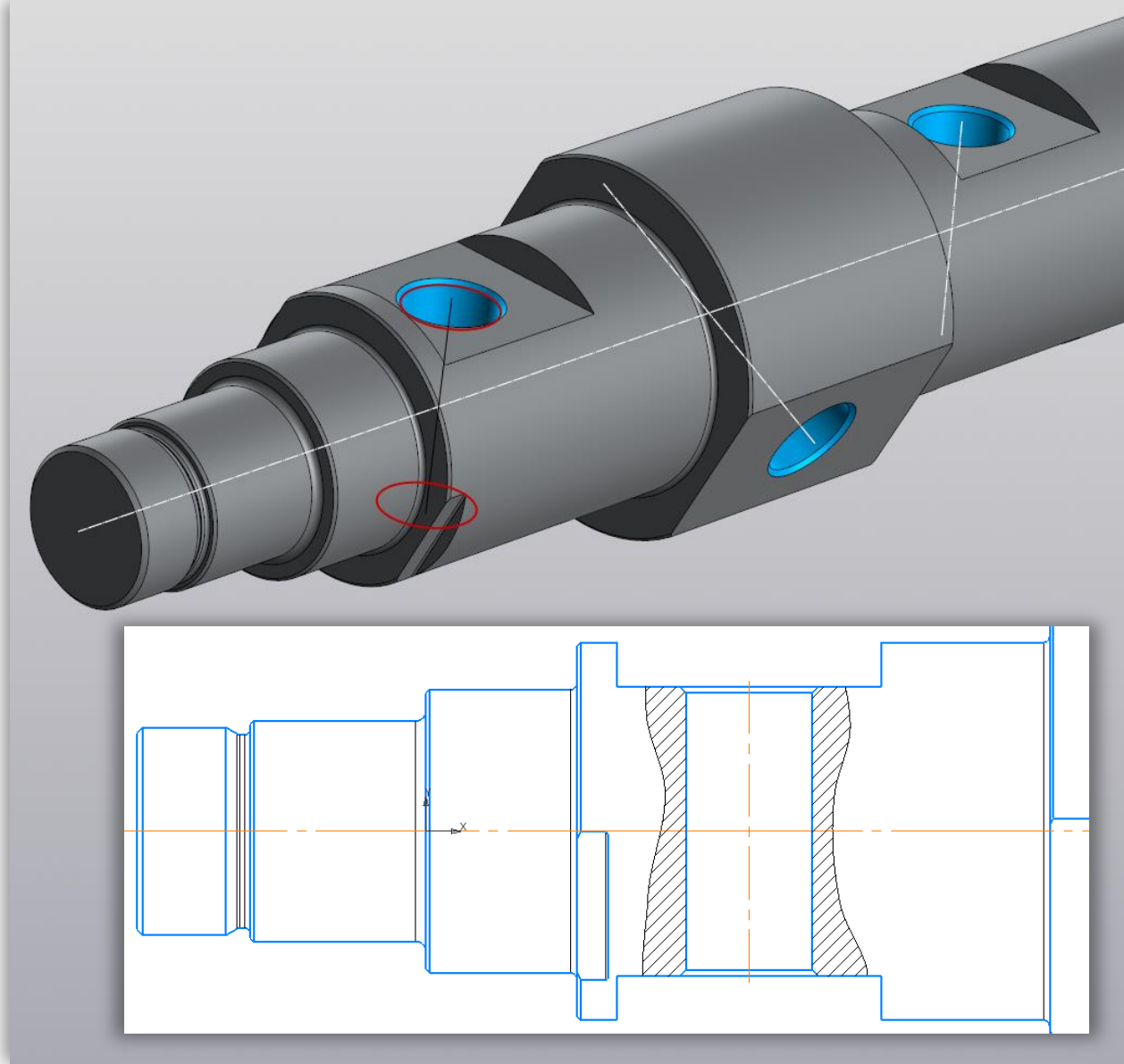

Thread symbols in the model

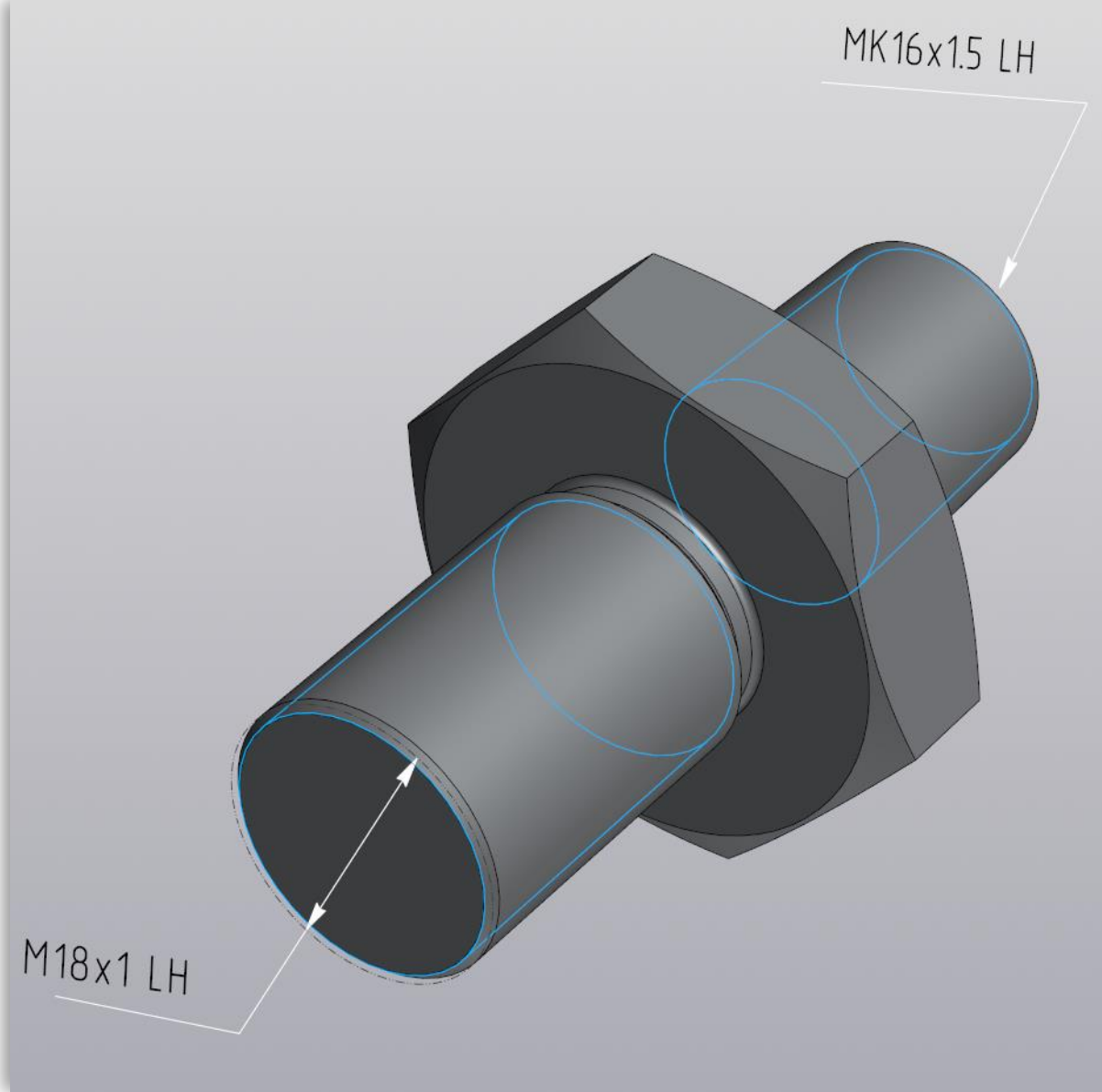

Update of a geometry copy

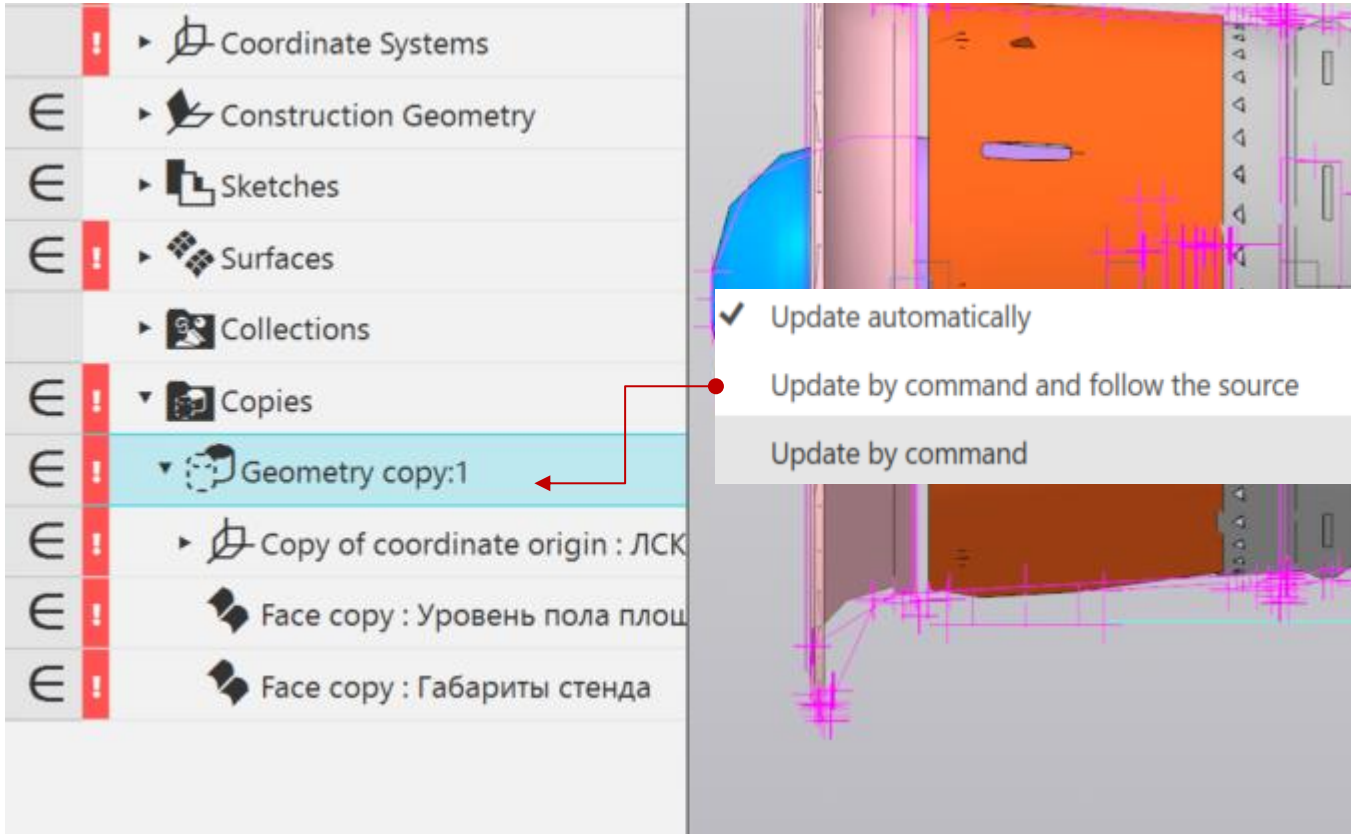

Sheet metal

Strengthening edge profile

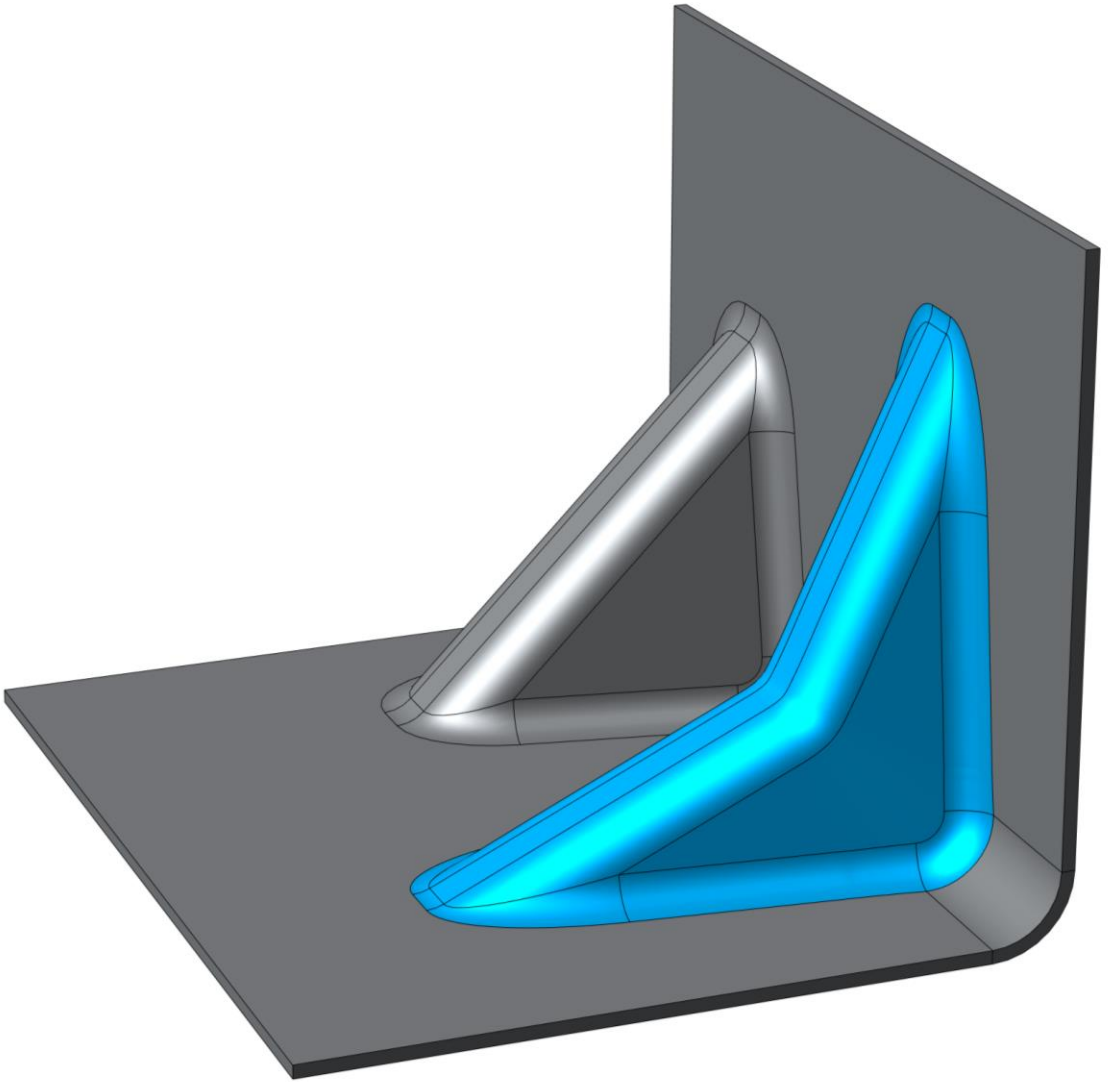

Bend by Sketch

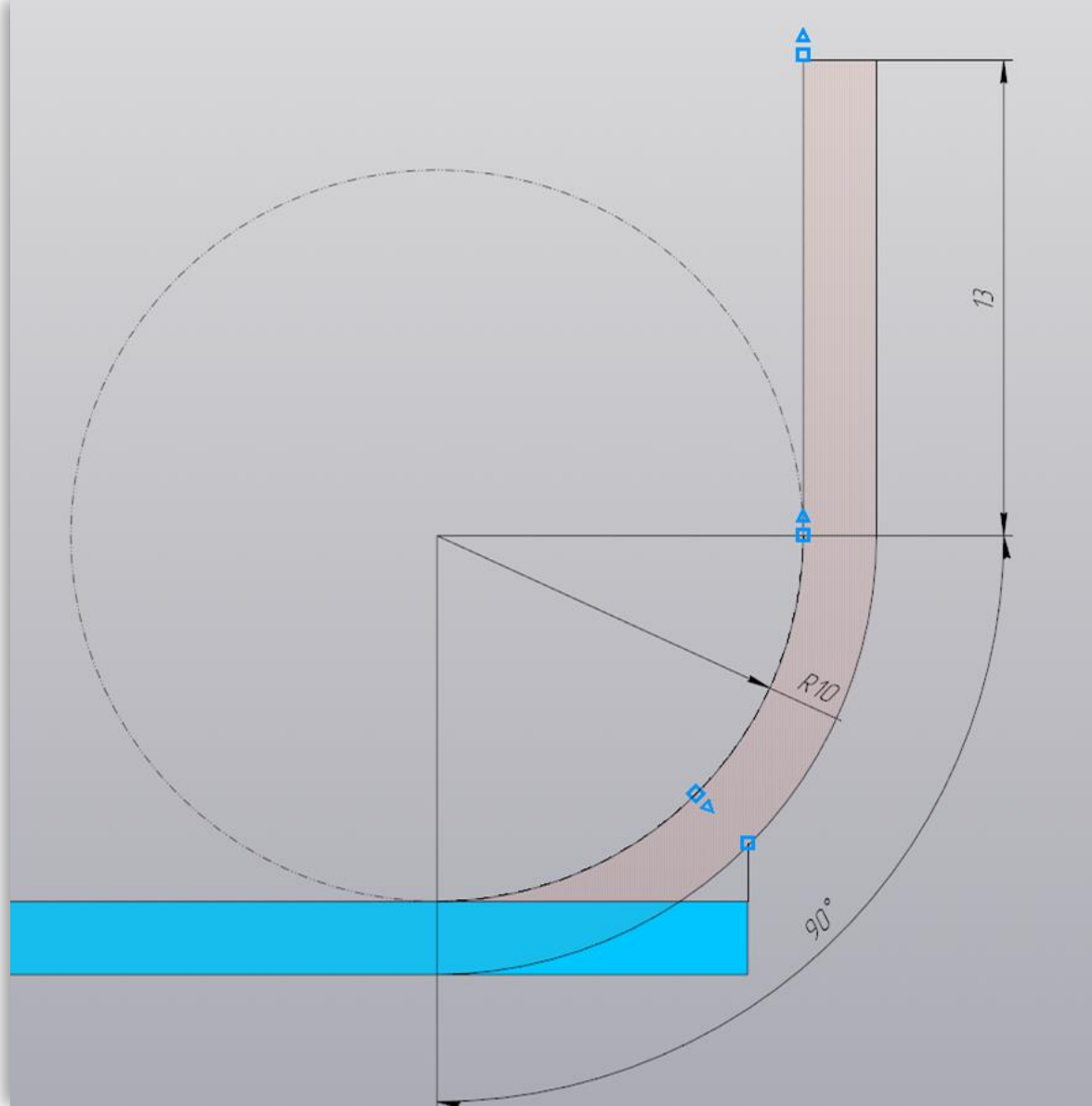

Spherical Beats

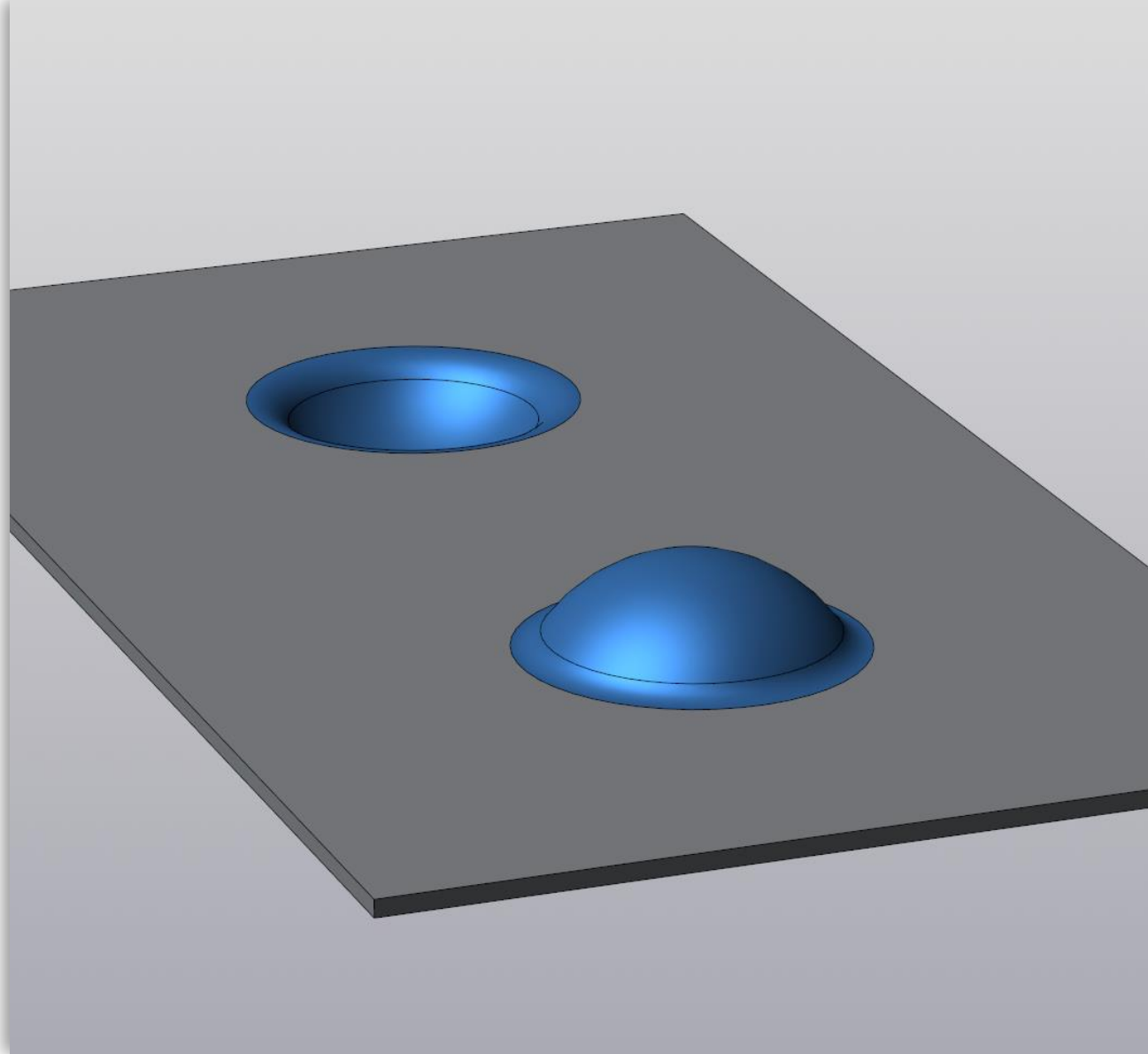

Place Bend lines on flat pattern directly

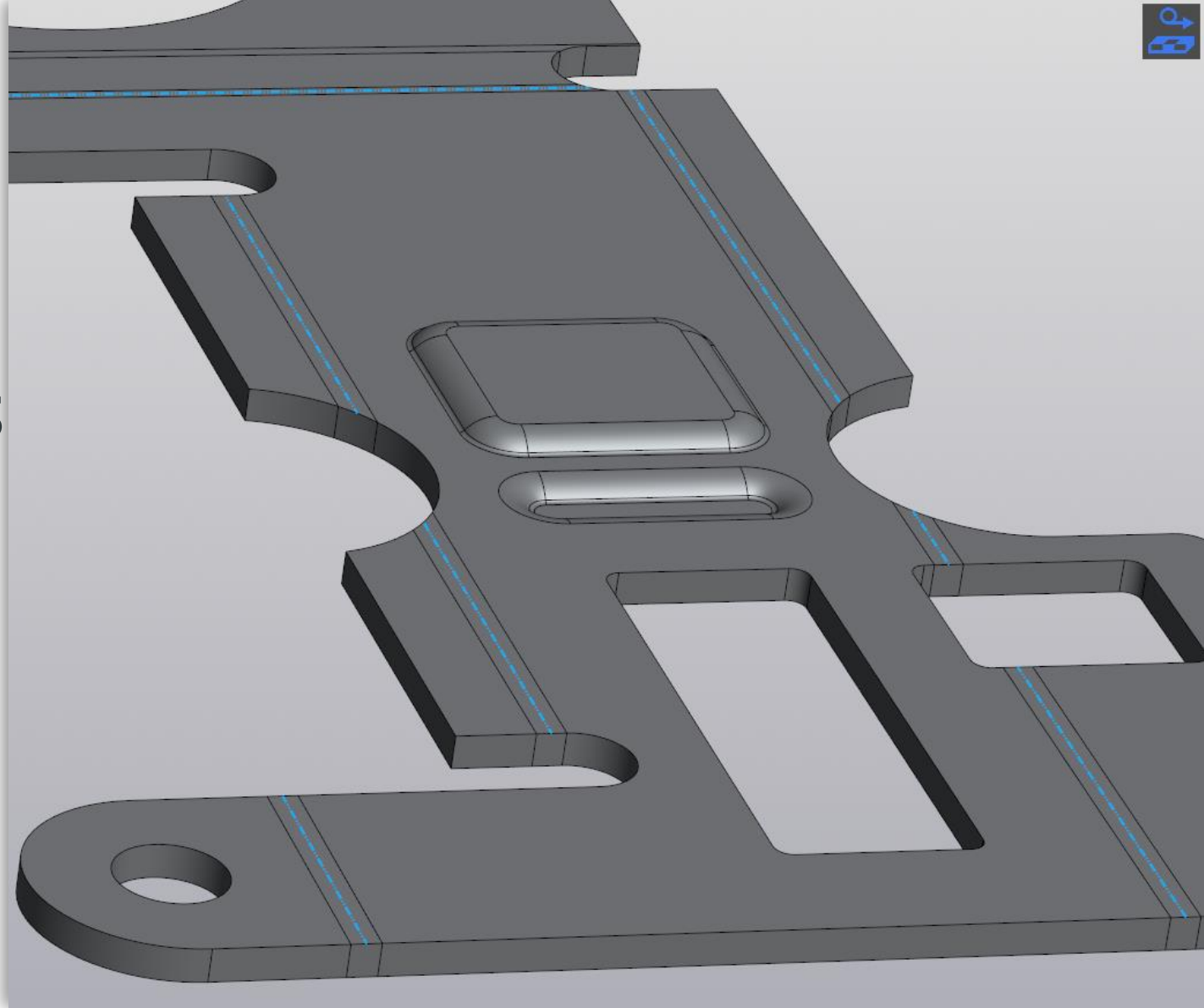

Flat pattern dimensioning

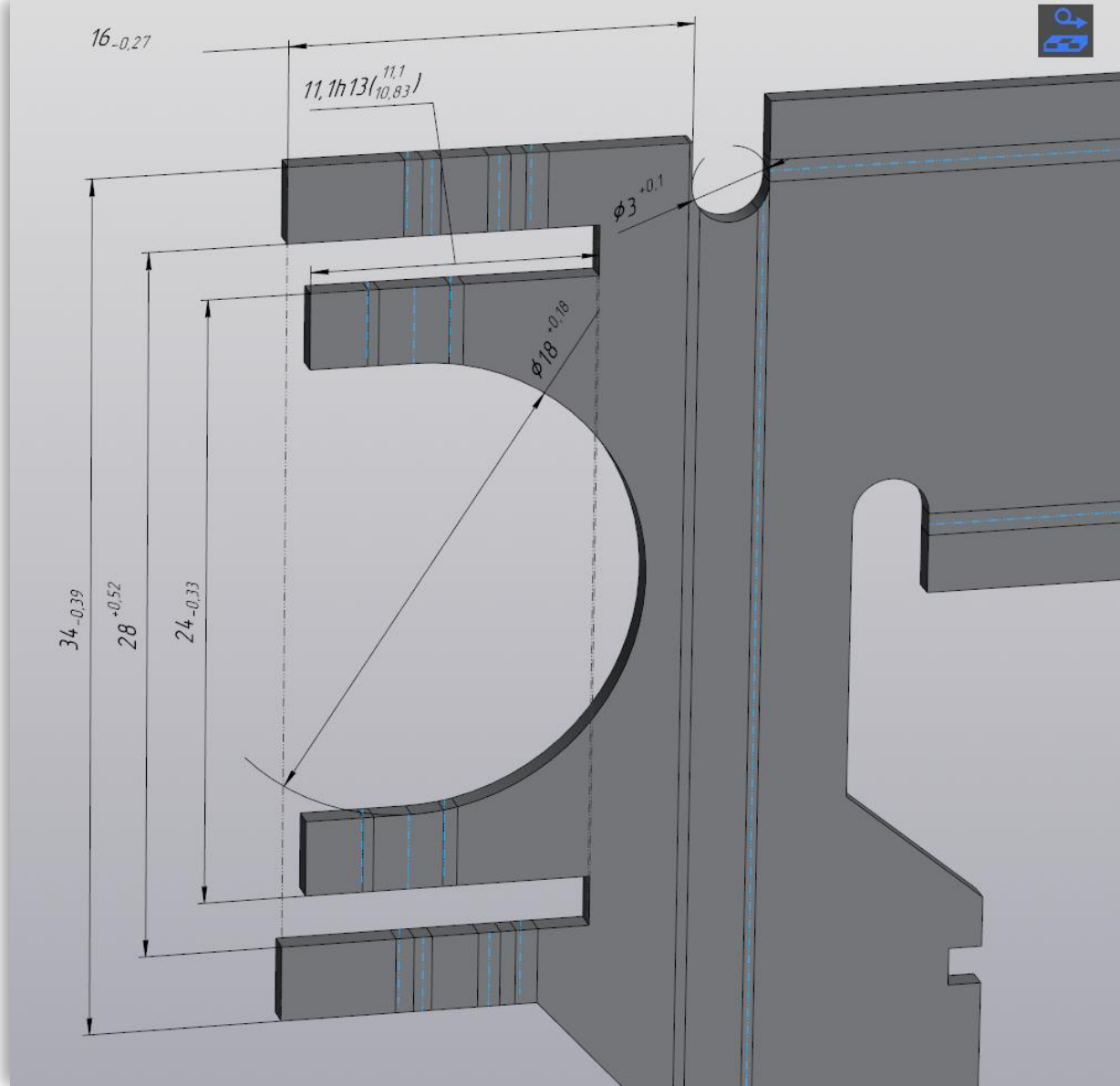

2D-functionality novelties

Round grid of centers

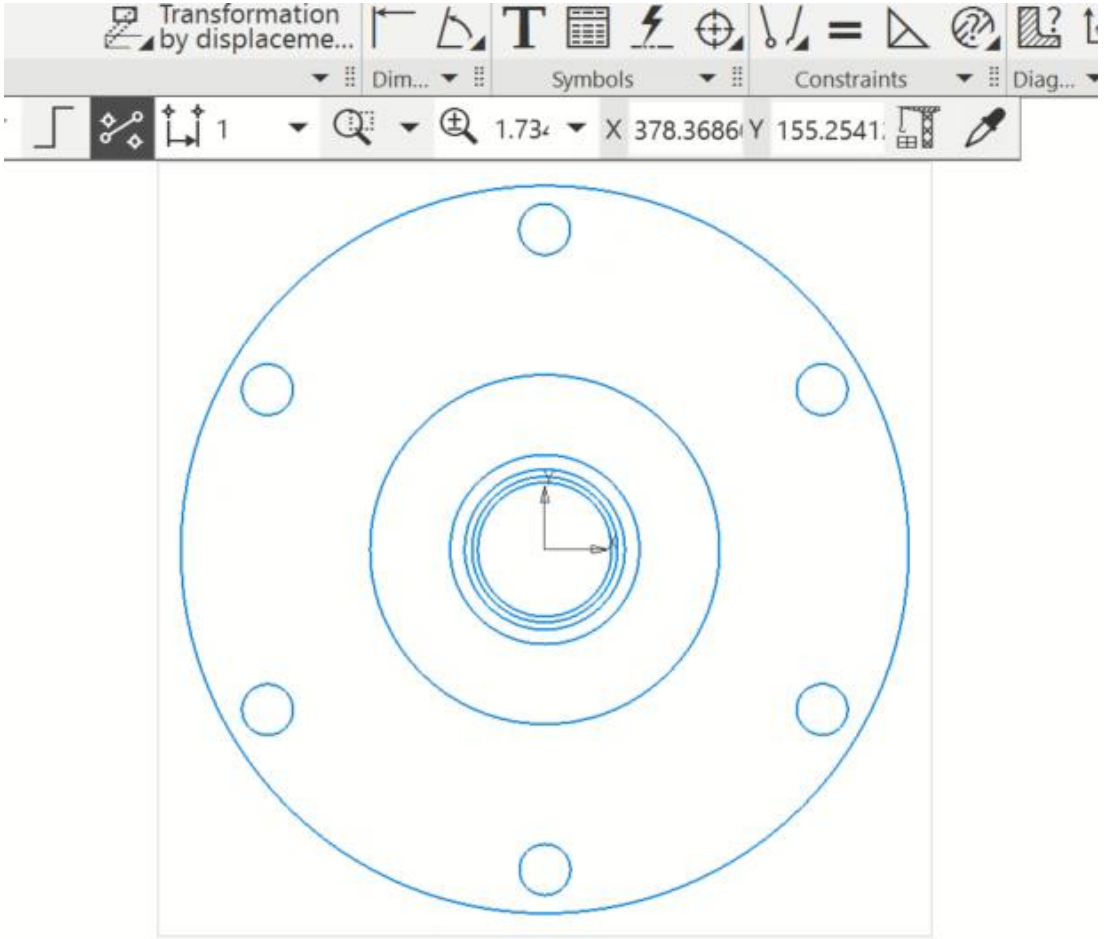

Linear grid of centers

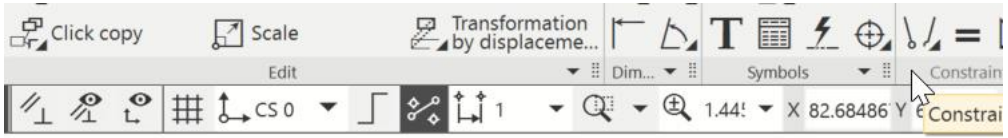

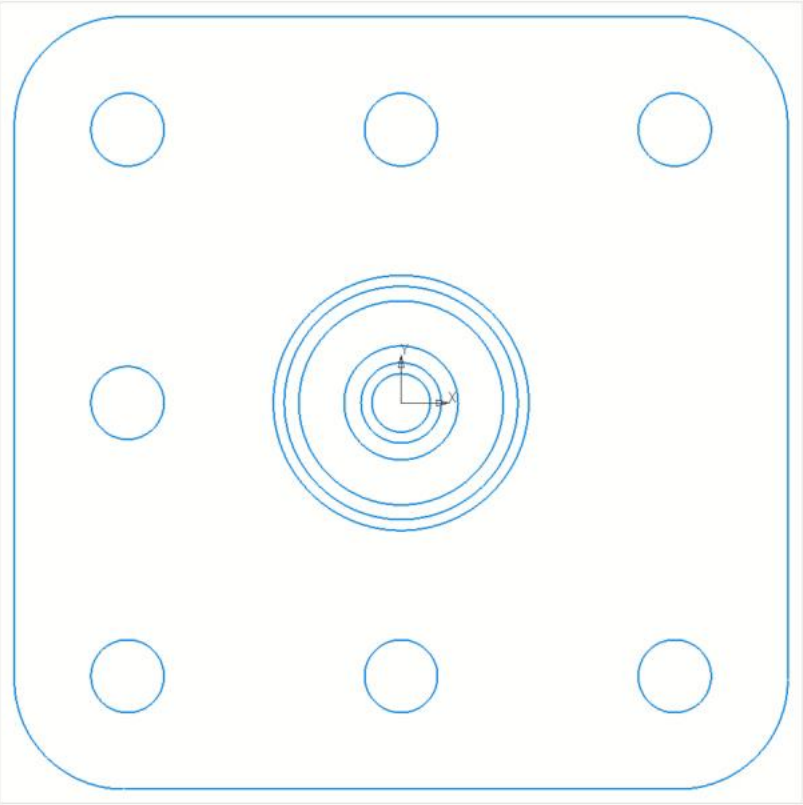

Auto center

k copy
Scale
Transformation by displaceme...
Edit
Dim...
Symbols
Constraints
CS 0
1
1.445
X 67.13570
Y -66.8324

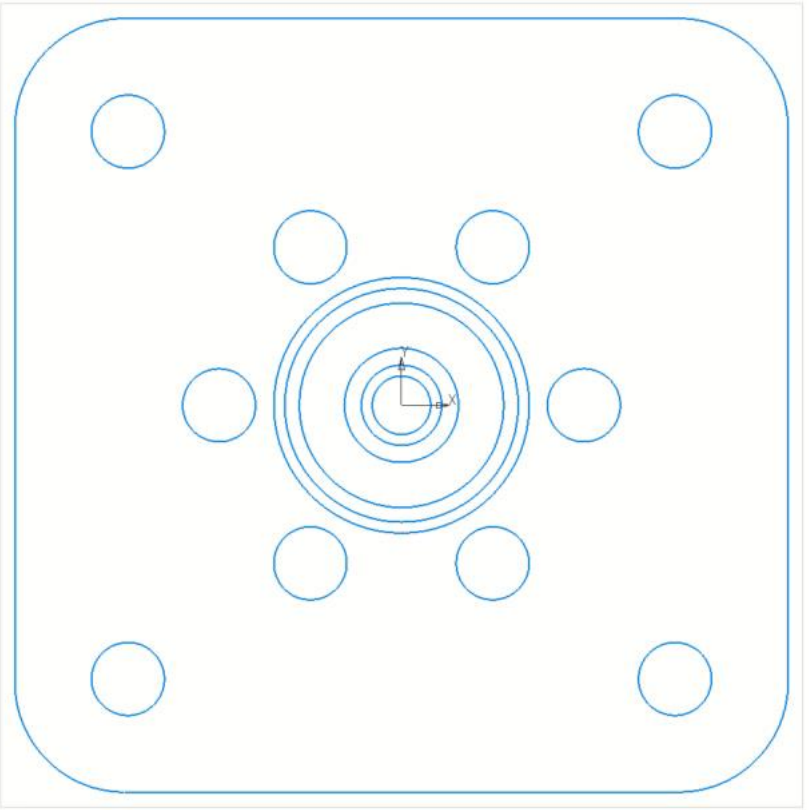

Quick Actions on Components in a Drawing:

To show in the Tree

Properties of a component

To edit in a window

To hide a component

To cut / not to cut

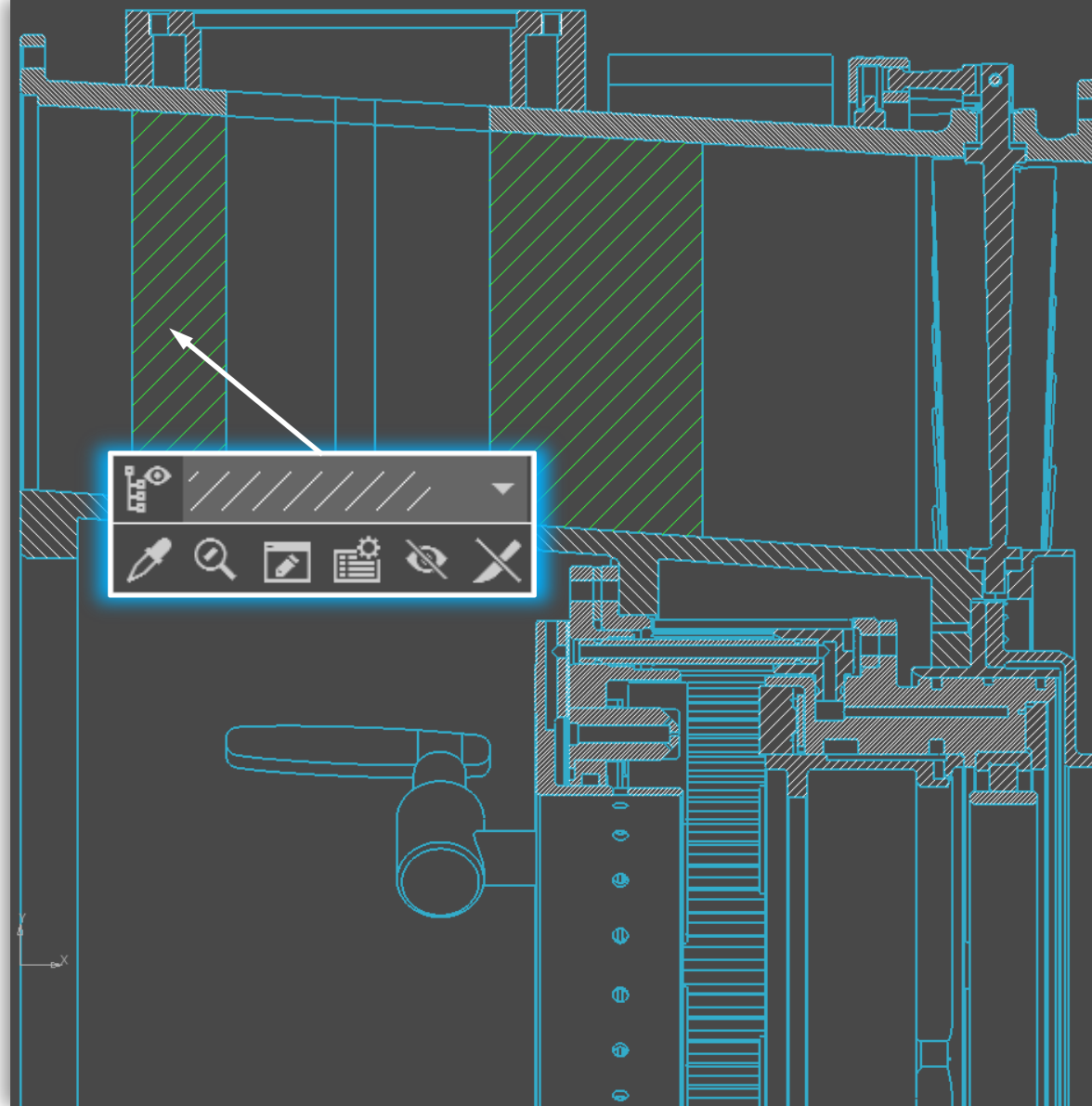

Projected component fast selection

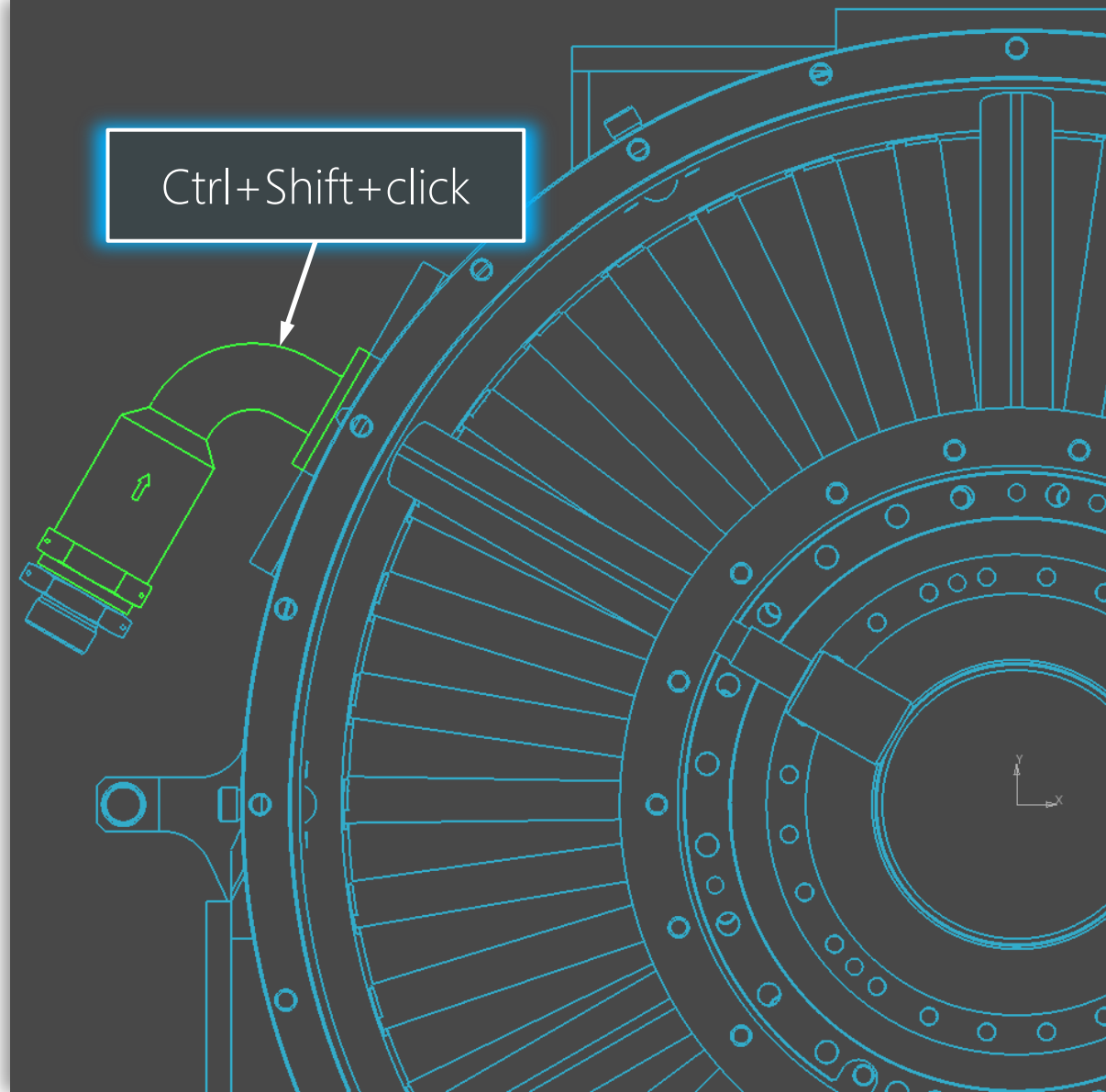

Clear region

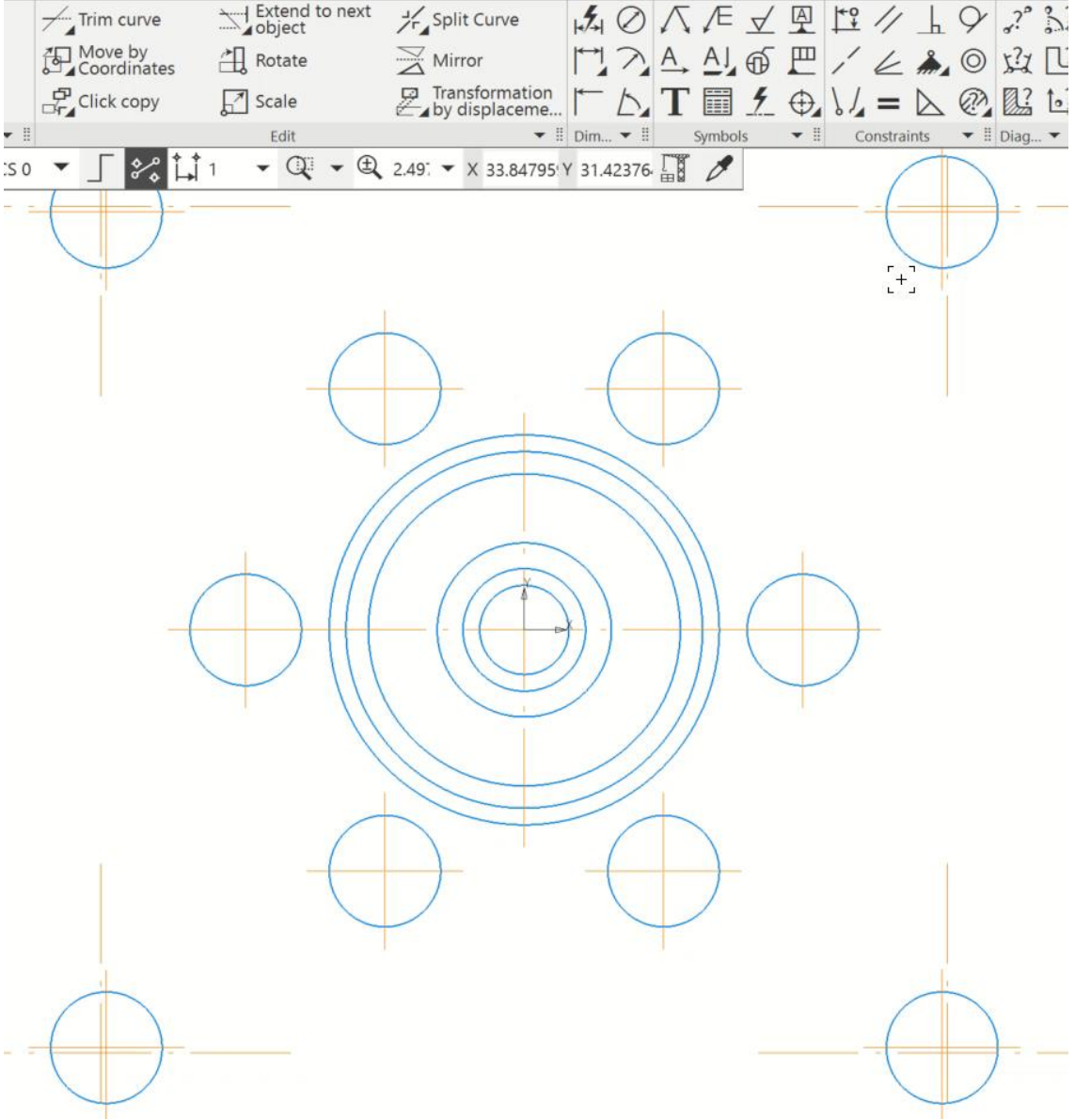

Dimension text quick adjusting

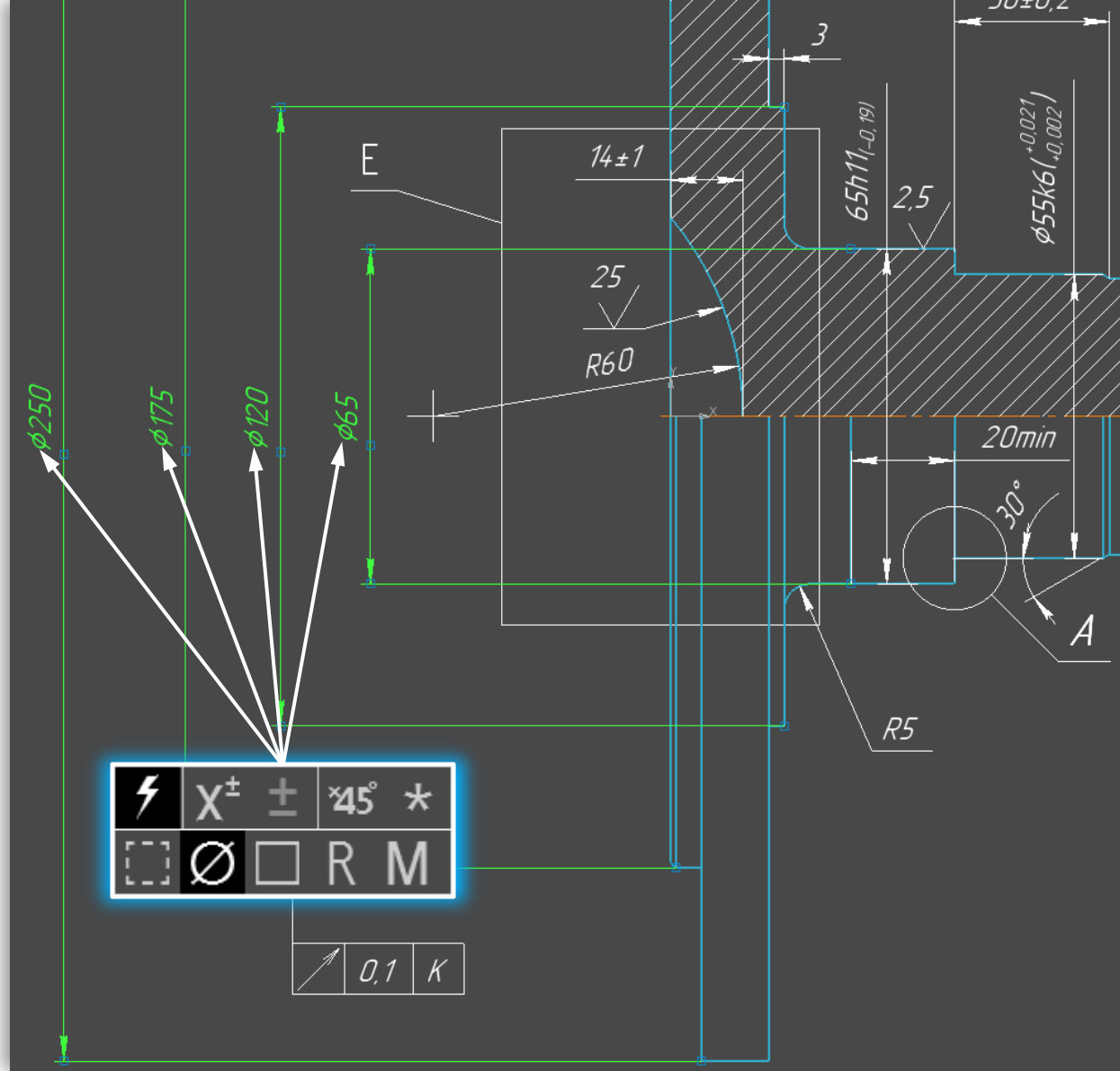

Add-Ons novelties

Steel constructions – bolt connections

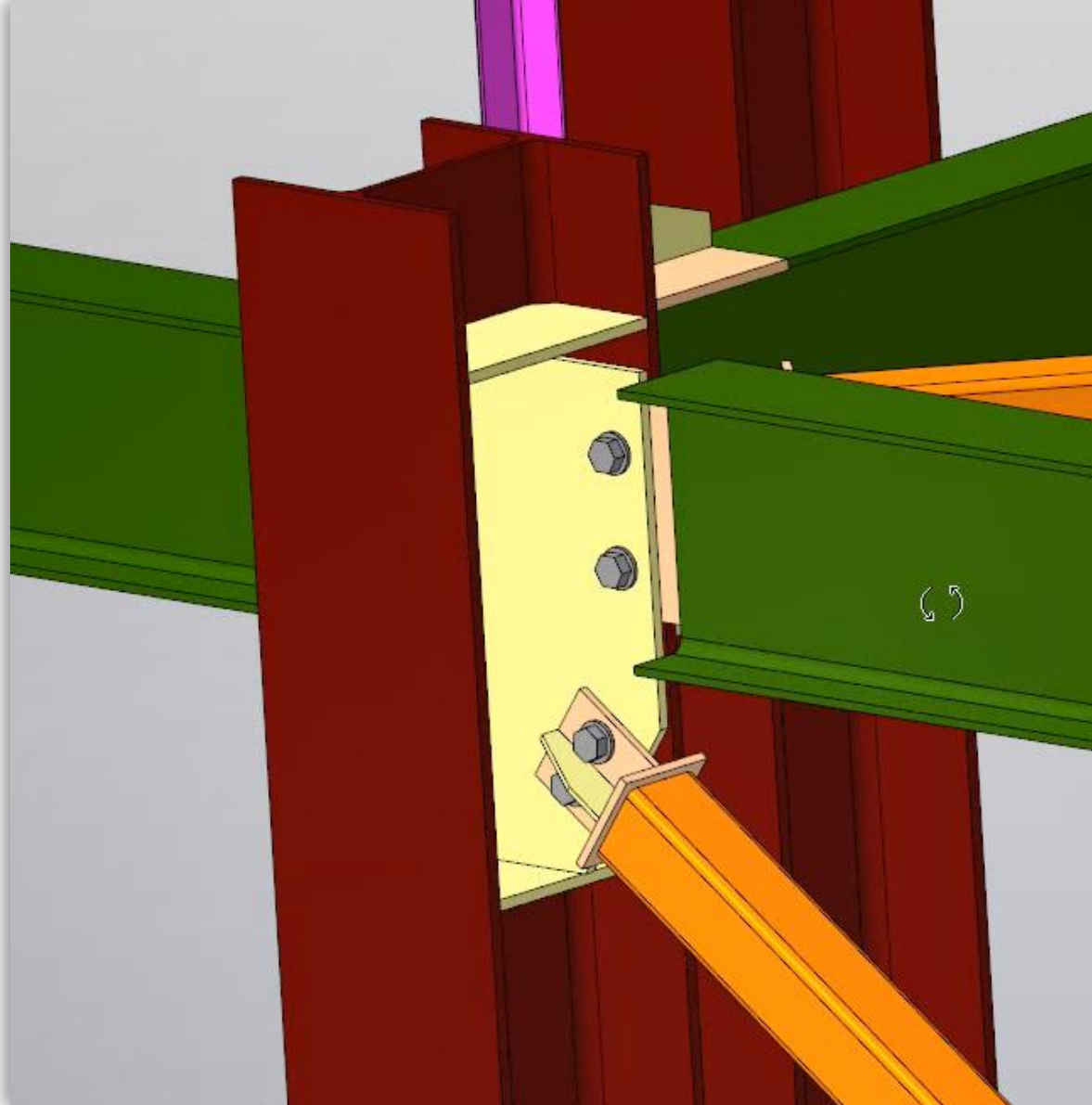

Typical connection

[Steel constructions]

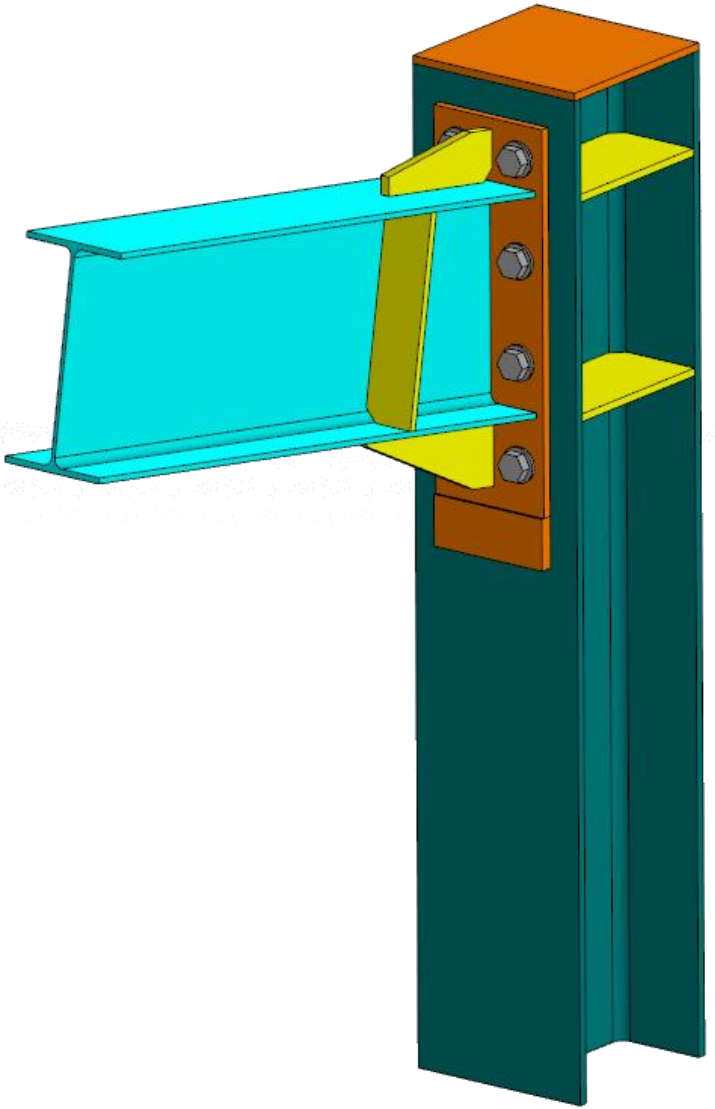

Gap for welding

[Pipelines]

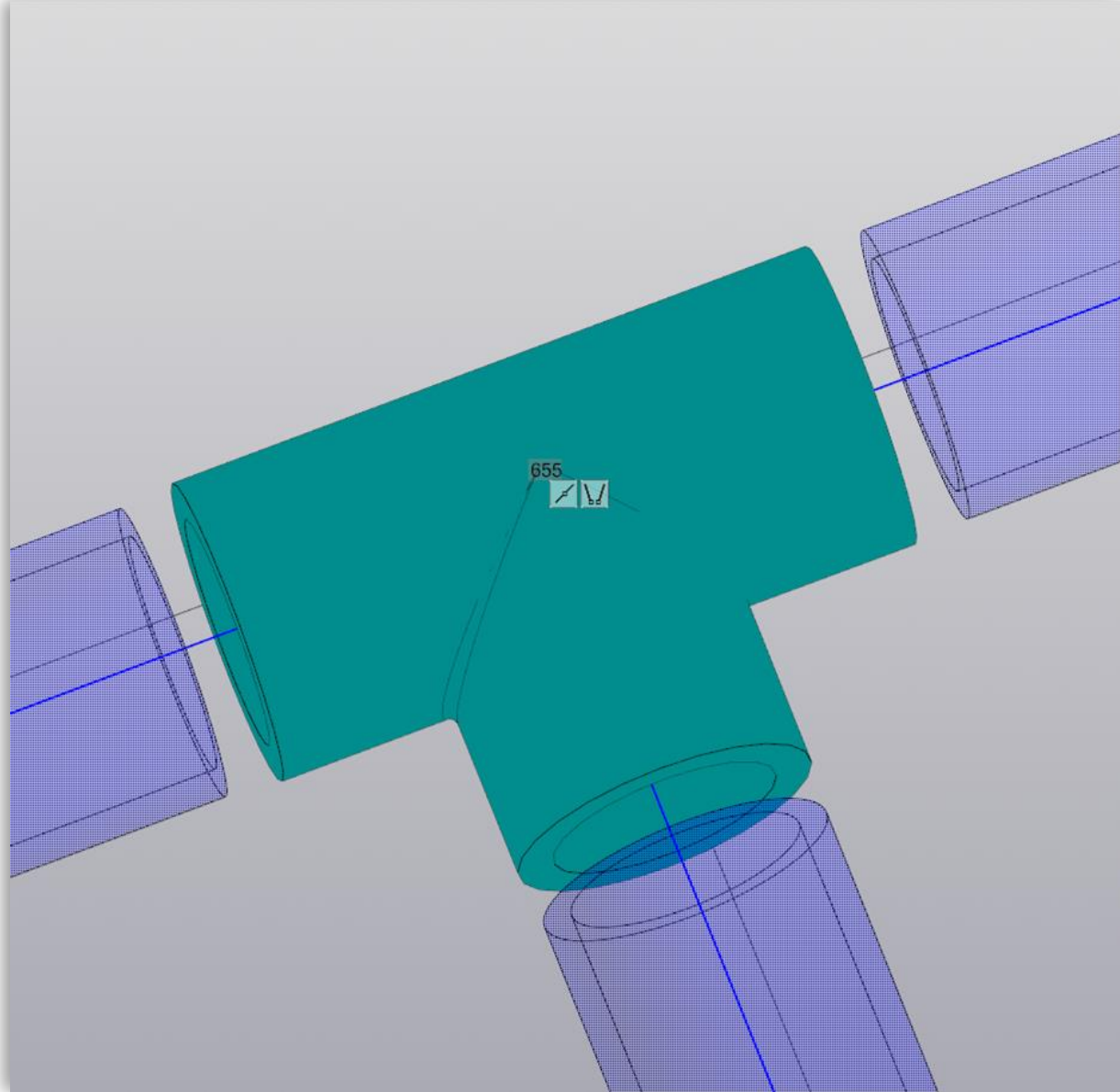

- Connection point
- Choice of style of the pipeline

[Pipelines]

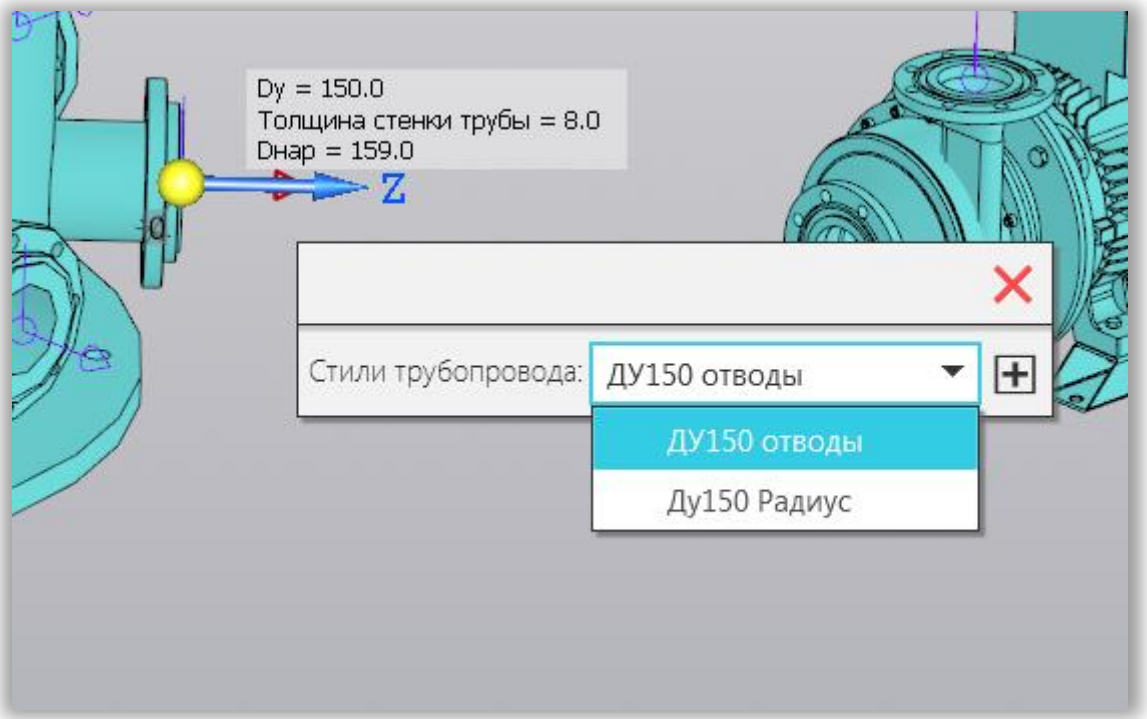

Flexible hoses

[Pipelines]

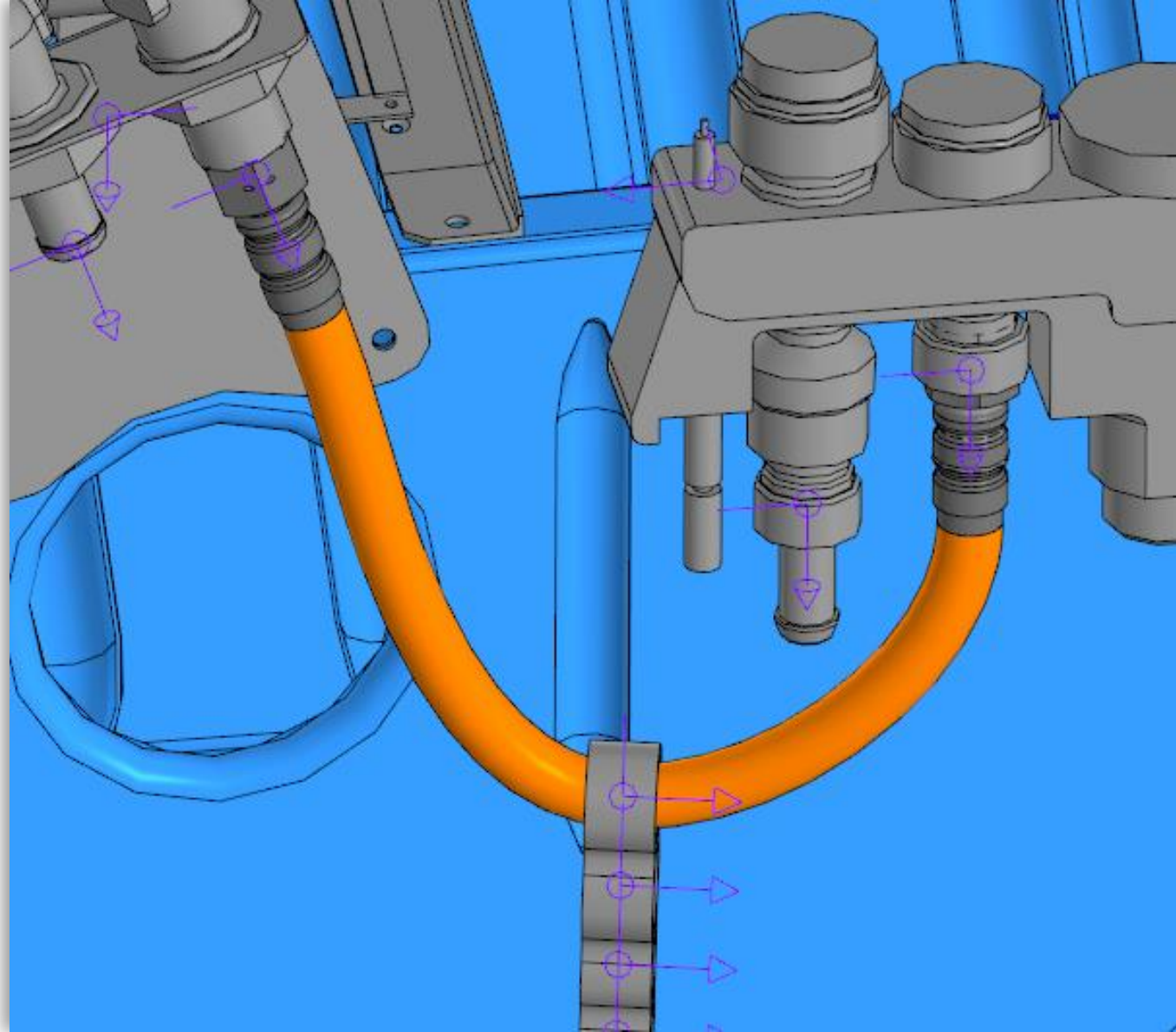

Hydrogas dynamics and thermal conductivity calculations

[KompasFlow]

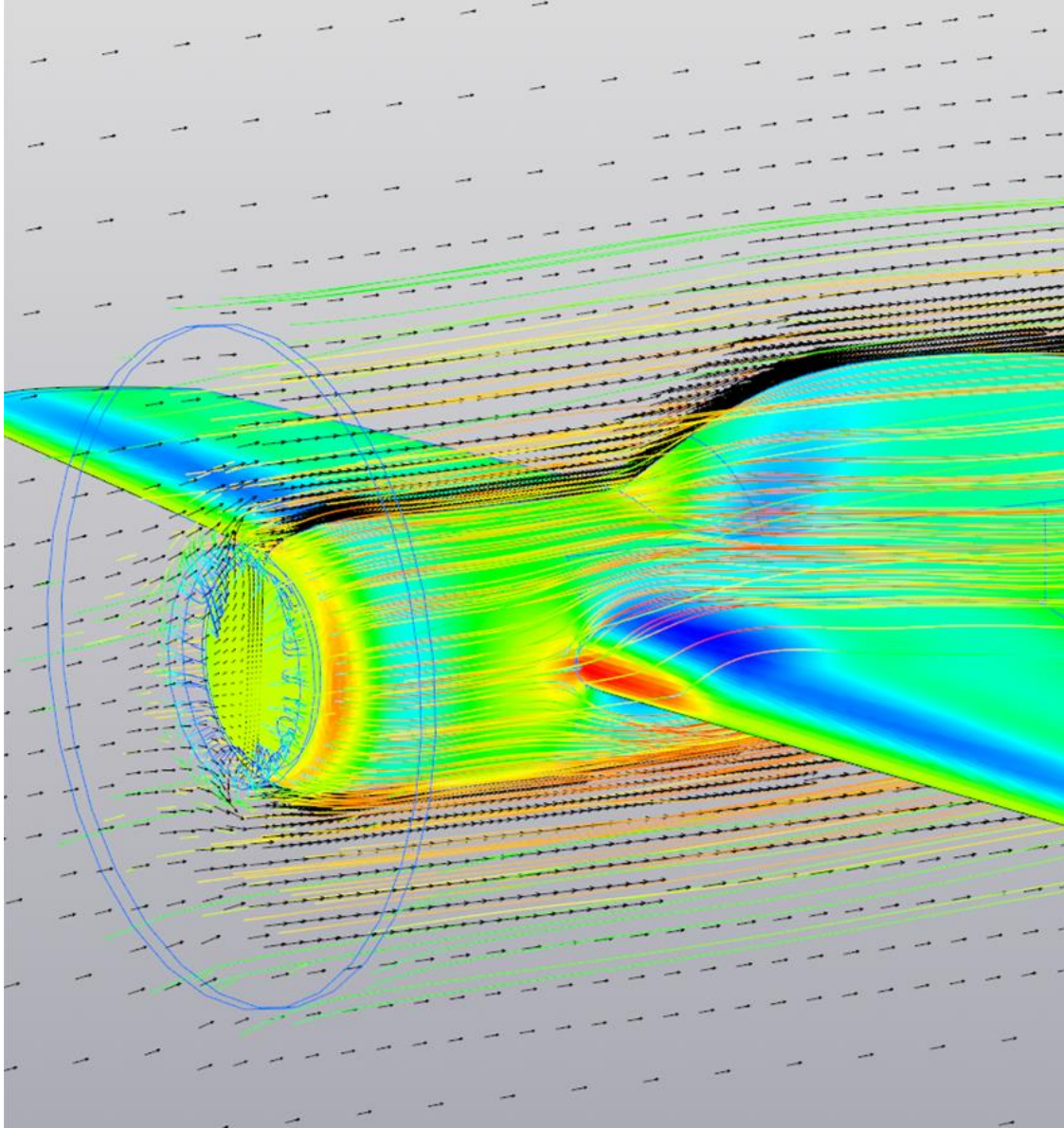

Topological optimization

[APM FEM. Topological optimization]

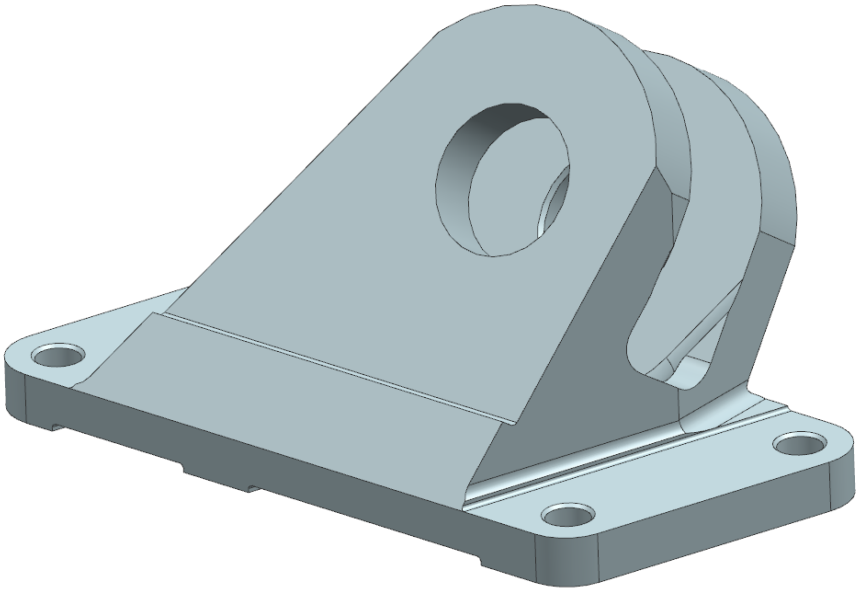

Download free from
www.ascon.net
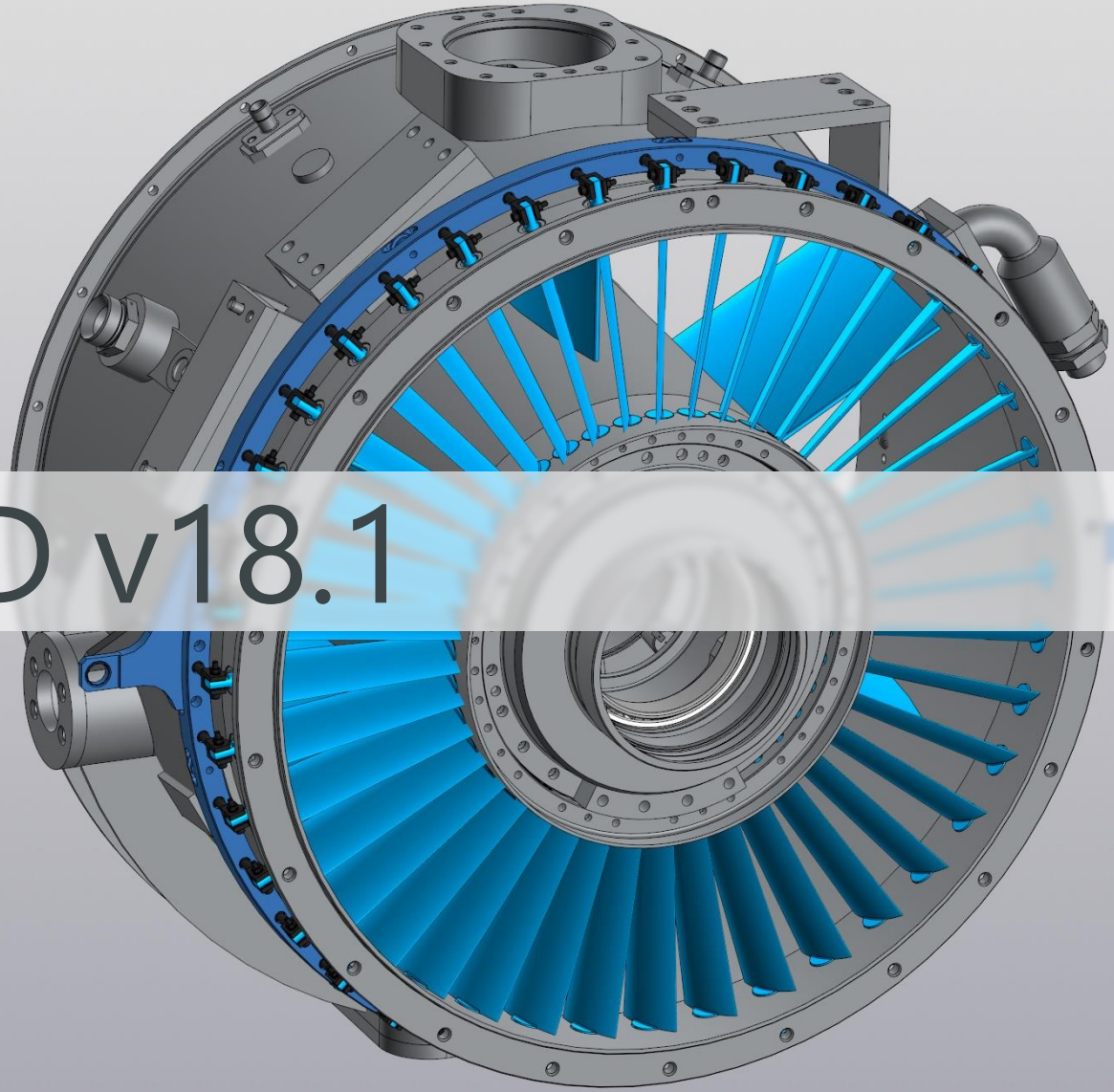
KOMPAS-3D v18.1